Bar Light Flash
blue light, 250 mm

LBFB201
Part Number



- **Extremely short rise time**
- **Flexibility: expand the beam angle with an Angle Changer**
- **High power OverDrive**
- **No external control required**
- **Strobe only**

The bar lights from the LBF series achieve a light output of up to 2.5 million lux and are suitable for small to large working distances. As direct lights, they enable lighting concepts such as brightfield, darkfield, dome illumination and low-angle illumination. With a rise time of up to 800 ns, they support very short exposure times of vision systems, which minimizes motion blur in high-speed applications. They can be triggered directly via the camera; a separate timing controller is not required. Direct synchronization is possible in the powerful flash mode OverDrive. Angle changers allow flexible adjustment of the beam angle and polarization of the light.

Technical Data

Optical Data	
Light Source	Blue Light
Wavelength	470 nm
Beam angle	± 7 °
Measuring point distance	200 mm
Compatible with	Angle Changer
Environmental conditions	
Temperature Range	0...40 °C
Storage temperature	-20...60 °C
Atmospheric humidity	< 80%, non-condensing
Electrical Data	
Supply Voltage	21,6...26,4 V DC
Power	16,8 W
Peak power	24 W
Current Consumption (Ub = 24 V)	0,7 A
Current consumption flash mode OverDrive (operating voltage = 24 V)	1 A
Flash duration (max.)	2,5 ms
Duty cycle (max.)	3,5 %
Rise time	0,8 µs
Fall time	0,25 µs
Input signal	NPN
Input signal	PNP
Short Circuit Protection	yes
Reverse Polarity Protection	yes
Overload Protection	yes
Protection Class	III
Dimming	0...10 V ≙ 100...30%
OverDrive	yes
Mechanical Data	
Luminous Field Length (L)	250 mm
Luminous Field Width (W)	31,5 mm
Luminous Field	250 × 31,5 mm
Housing Material	Aluminum, anodised
Housing Material	Plastic, ABS
Housing Material	Plastic, PC
Degree of Protection	IP65
UL Enclosure Type	1
Optic Cover	Plastic, PMMA
Connection	M12 × 1; 5-pin
Max. cable lenght	90 m
Function	
Operating modes	Flash mode OverDrive
Connection Diagram No.	007
Suitable Mounting Technology No.	925

Complementary Products

ZBAG angle changer
ZBAZ001 bar clamp
ZC4G003 connection cable
ZDCG004 connection cable
ZDCG005 connection cable

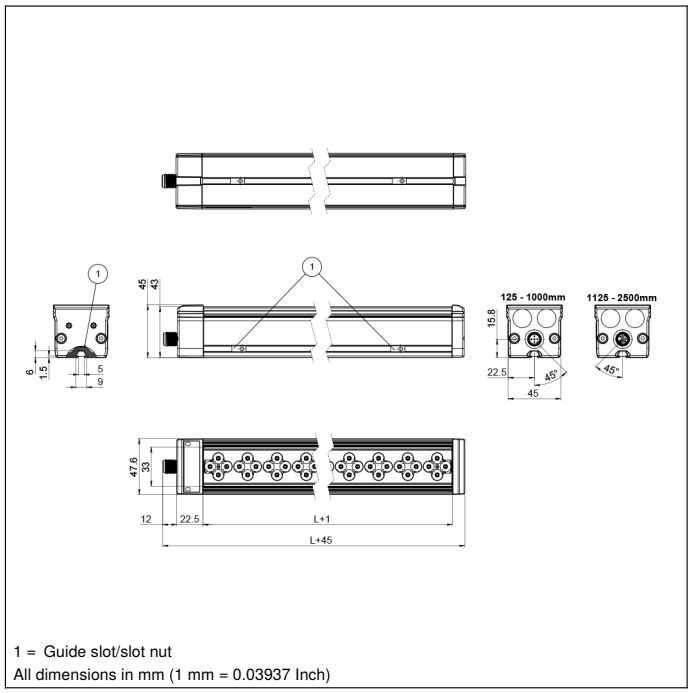

1 = Guide slot/slot nut
All dimensions in mm (1 mm = 0.03937 Inch)

Ctrl. Panel

T17



68 = Power LED
9b = Strobe Mode Indicator

007

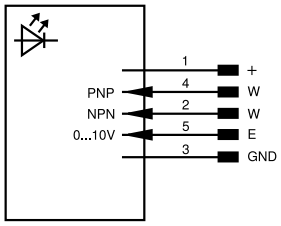

Legend					
+	Supply Voltage +	PT	Platinum measuring resistor	ENARS422	Encoder A/Ā (TTL)
–	Supply Voltage 0 V	nc	Not connected	ENBRS422	Encoder B/B̄ (TTL)
~	Supply Voltage (AC Voltage)	U	Test Input	ENA	Encoder A
A	Switching Output (NO)	Ū	Test Input inverted	ENB	Encoder B
Ā	Switching Output (NC)	W	Trigger Input	AMIN	Digital output MIN
V	Contamination/Error Output (NO)	W–	Ground for the Trigger Input	AMAX	Digital output MAX
V̄	Contamination/Error Output (NC)	O	Analog Output	AOK	Digital output OK
E	Input (analog or digital)	O–	Ground for the Analog Output	SY In	Synchronization In
T	Teach Input	BZ	Block Discharge	SY OUT	Synchronization OUT
R	Reset input	AMV	Valve Output	OLT	Brightness output
Z	Time Delay (activation)	a	Valve Control Output +	M	Maintenance
S	Shielding	b	Valve Control Output 0 V	rsv	Reserved
RxD	Interface Receive Path	SY	Synchronization	Wire Colors according to DIN IEC 60757	
TxD	Interface Send Path	SY–	Ground for the Synchronization	BK	Black
RDY	Ready	E+	Receiver-Line	BN	Brown
GND	Ground	S+	Emitter-Line	RD	Red
CL	Clock	⏚	Grounding	OG	Orange
E/A	Output/Input programmable	SnR	Switching Distance Reduction	YE	Yellow
	IO-Link	Rx+/–	Ethernet Receive Path	GN	Green
PoE	ower over Ethernet	Tx+/–	Ethernet Send Path	BU	Blue
IN	Safety Input	Bus	Interfaces-Bus A(+)/B(–)	VT	Violet
OSSD	Safety Output	La	Emitted Light disengageable	GY	Grey
Signal	Signal Output	Mag	Magnet activation	WH	White
BI_D+/–	Ethernet Gigabit bidirect. data line (A-D)	RES	Input confirmation	PK	Pink
EN0 RS422	Encoder 0-pulse 0/0̄ (TTL)	EDM	Contactor Monitoring	GNYE	Green/Yellow

Specifications are subject to change without notice V0-23.11.2026