M3DS114

Part Number

- **5 MP resolution**
- **Easy integration via SDK or GenICam**
- **High point cloud quality**
- **Integrated 3D point cloud calculation on the unit**

M3DS1xx 3D sensors are distinguished by high precision for minimal measuring volumes. The model variants of the M3DS1xx series are available in two performance classes with camera resolutions of 5 or 12 megapixels. The robust design makes the M3DS1xx sensors suitable for use in industrial environments. With its fast Ethernet interface and three different measuring ranges in each performance class, the M3DS1xx impresses in terms of diversity and speed.

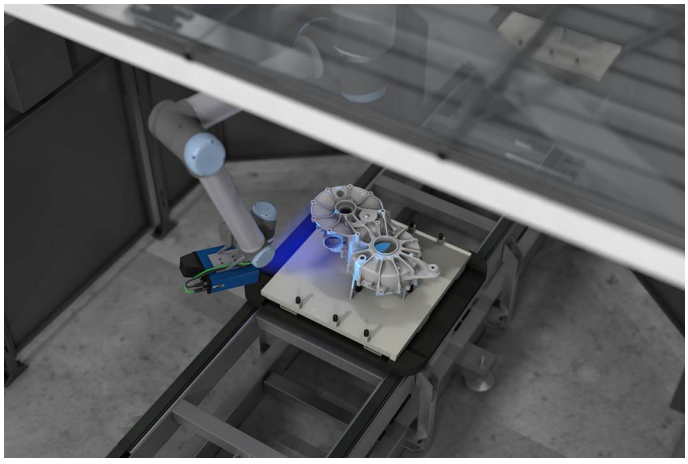

Technical Data

Optical Data	
Working range Z	400...600 mm
Measuring range Z	200 mm
Measuring range x1/y1	290 × 240 mm
Measuring range x2/y2	430 × 360 mm
Resolution Z	0,035...0,08 mm
Resolution x1/y1	0,12 × 0,12 mm
Resolution x2/y2	0,17 × 0,17 mm
Camera Resolution	5 MP
Number of pixels	2448 × 2048 Pixel
Light Source	LED, blue
Wavelength	457 nm
Service Life (T = +25 °C)	20000 h
Risk Group (EN 62471)	2
Environmental conditions	
Temperature Range	0...40 °C
Storage temperature	-5...70 °C
Max. Ambient Light	5000 Lux
EMC	DIN EN 61000-6-2; 61000-6-4
Atmospheric humidity	5...95%, non-condensing
Electrical Data	
Supply Voltage	18...30 V DC
Max. Current Consumption (Ub = 24 V)	3,5 A
Acquisition time	0,22...0,5 s
Inputs/Outputs	4
Short Circuit Protection	yes
Reverse Polarity Protection	yes
Interface	Ethernet TCP/IP
Transmission rate	1...10 Gbit/s
Protection Class	III
Mechanical Data	
Setting Method	Web server
Housing Material	Aluminum, anodised
Housing Material	Plastic, PA6
Degree of Protection	IP67
Connection	M12 × 1; 12-pin
Type of Connection Ethernet	M12 × 1; 8-pin, X-cod.
Optic Cover	Plastic, PMMA
Safety-relevant Data	
MTTFd (EN ISO 13849-1)	71,35 a
	1 × initial start-up instructions
	1 × sensor
Connection Diagram No.	251, 1022
Suitable Connection Equipment No.	50, 87
Suitable Mounting Technology No.	343

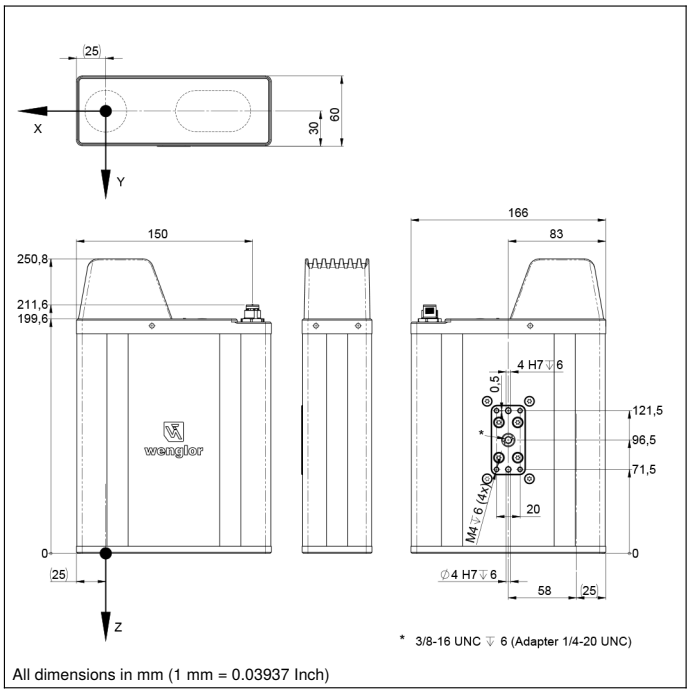

All dimensions in mm (1 mm = 0.03937 Inch)

Ctrl. Panel

A22

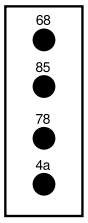

4a = User LED
68 = Power LED
78 = Module status
85 = Link/Act LED

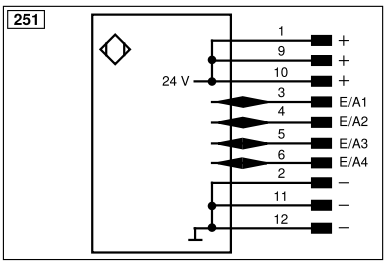

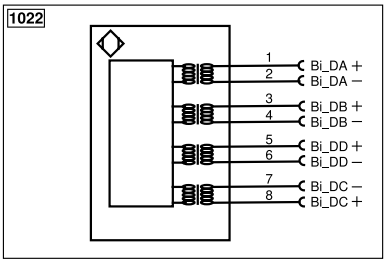

Legend					
+	Supply Voltage +	PT	Platinum measuring resistor	$EN_{A\,RS422}$	Encoder A/Ā (TTL)
–	Supply Voltage 0 V	nc	Not connected	$EN_{B\,RS422}$	Encoder B/B̄ (TTL)
~	Supply Voltage (AC Voltage)	U	Test Input	EN_A	Encoder A
A	Switching Output (NO)	Ū	Test Input inverted	EN_B	Encoder B
Ā	Switching Output (NC)	W	Trigger Input	A_{MIN}	Digital output MIN
V	Contamination/Error Output (NO)	W–	Ground for the Trigger Input	A_{MAX}	Digital output MAX
V̄	Contamination/Error Output (NC)	O	Analog Output	A_{OK}	Digital output OK
E	Input (analog or digital)	O–	Ground for the Analog Output	SY In	Synchronization In
T	Teach Input	BZ	Block Discharge	SY OUT	Synchronization OUT
R	Reset input	A_{MV}	Valve Output	O_{LT}	Brightness output
Z	Time Delay (activation)	a	Valve Control Output +	M	Maintenance
S	Shielding	b	Valve Control Output 0 V	rsv	Reserved
RxD	Interface Receive Path	SY	Synchronization	Wire Colors according to DIN IEC 60757	
TxD	Interface Send Path	SY–	Ground for the Synchronization	BK	Black
RDY	Ready	E+	Receiver-Line	BN	Brown
GND	Ground	S+	Emitter-Line	RD	Red
CL	Clock	⏚	Grounding	OG	Orange
E/A	Output/Input programmable	SnR	Switching Distance Reduction	YE	Yellow
	IO-Link	Rx+/–	Ethernet Receive Path	GN	Green
PoE	ower over Ethernet	Tx+/–	Ethernet Send Path	BU	Blue
IN	Safety Input	Bus	Interfaces-Bus A(+)/B(–)	VT	Violet
OSSD	Safety Output	La	Emitted Light disengageable	GY	Grey
Signal	Signal Output	Mag	Magnet activation	WH	White
BI_D+/–	Ethernet Gigabit bidirect. data line (A-D)	RES	Input confirmation	PK	Pink
$EN_{0\,RS422}$	Encoder 0-pulse 0/0̄ (TTL)	EDM	Contactor Monitoring	GNYE	Green/Yellow

Specifications are subject to change without notice V0-23.11.2026