wenglor
the innovative family

Operating Instructions
M3DSxxx
3D Sensors



EN

Translation of the original operating instructions
Subject to change without notice
Available as PDF file only
Version 1.0
www.wenglor.com

Table of Contents

1 General 4

1.1 Information Concerning these Instructions 4

1.2 Explanation of Symbols 4

1.3 Limitation of Liability 5

1.4 Copyrights 5

2 For Your Safety 6

2.1 Use for Intended Purpose 6

2.2 Use for Other than the Intended Purpose 6

2.3 Personnel Qualifications 6

2.4 Modification of Products 7

2.5 Repair 7

2.6 General Safety Precautions 7

2.7 LED Warning 7

2.8 Approvals and protection classes 7

3 Technical Data 8

3.1 General Information 8

3.2 Warm-Up Phase 11

3.3 Factory Settings 11

3.4 Visual Fields 12

3.5 Housing Dimensions 13

3.6 Structure 15

3.7 Control panel 16

3.8 Complementary Products 16

3.9 Scope of delivery 16

4 Transport and Storage 17

4.1 Transport 17

4.2 Storage 17

5 Installation and Electrical Connection 18

5.1 Installation 18

5.1.1 Tightening Torques 18

5.2 Adjustment 19

5.3 Electrical Connection 19

5.4 Diagnostics 21

5.5 Troubleshooting (Device Status) 21

5.6 Configure LAN Network Settings 22

5.6.1 Manual LAN Network Settings 22

6 Settings 25

6.1 Trigger Behavior 25

6.2 Device Button 29

7 Function Description 30

8 Software 31

8.1 wenglor weHub 31

8.2 wenglor Vision Viewer 31

8.3 Interfaces ... 31

9 Device Website ... 32

9.1 Page Layout ... 33

9.2 Dashboard ... 33

9.3 Interfaces ... 34
9.3.1 Network (LAN) ... 34
9.3.2 NTP Client ... 35

9.4 Diagnostics ... 36
9.4.1 CPU ... 36
9.4.2 RAM ... 36
9.4.3 LAN Ethernet ... 37
9.4.4 Temperature ... 37
9.4.5 Data Buffer ... 38
9.4.6 Browser Information ... 38
9.4.7 Logging ... 38

9.5 Settings ... 39

9.6 Device Status ... 42

9.7 Log In and Log Out ... 42

9.8 Help Button ... 44

10 Maintenance Instructions ... 45

11 Proper Disposal ... 46

12 Declarations of Conformity ... 47

1 General

1.1 Information Concerning these Instructions

- These instructions ensure the safe and efficient use of the product.
- These instructions are part of the product and must be retained for its entire service life.
- In addition, local accident prevention regulations and national occupational safety regulations must be observed.
- The product is subject to technical improvements, so the instructions and information in these operating instructions may also be subject to change. You can find the current version at www.wenglor.com in the product's download section.



INFORMATION

The operating instructions must be read carefully before use and kept for future reference.

1.2 Explanation of Symbols

- Safety precautions and warnings are emphasized by means of symbols and signal words.
- Safe use of the product is only possible if these safety precautions and warnings are adhered to.

The safety precautions and warnings are laid out in accordance with the following principle:

SIGNAL WORD

Type and source of danger!

Possible consequences in the event that the hazard is disregarded.

→ Measures for averting the hazard.

The meanings of the signal words, as well as the scope of the associated hazards, are listed below:



⚠ DANGER

This signal word indicates a hazard with a high degree of risk which, if not avoided, results in death or severe injury.



⚠ WARNING

This signal word indicates a hazard with a medium degree of risk which, if not avoided, may result in death or severe injury.



⚠ CAUTION

This signal word indicates a hazard with a low degree of risk which, if not avoided, may result in minor or moderate injury.



NOTICE

This signal word draws attention to a potentially hazardous situation which, if not avoided, may result in property damage.



INFORMATION

Information draws attention to useful tips and suggestions, as well as information on efficient, error-free use.

1.3 Limitation of Liability

- The product has been developed in consideration of the current state-of-the-art technology, as well as applicable standards and guidelines. Subject to change without notice.
- A valid declaration of conformity can be accessed at www.wenglor.com in the product's separate download area.
- wenglor sensoric elektronische Geräte GmbH (hereinafter referred to as "wenglor") excludes all liability in the event of:
  - Non-compliance with the instructions
  - Use of the product for purposes other than those intended.
  - Use by untrained personnel.
  - Use of unapproved spare parts.
  - Unapproved modification of products.
- These operating instructions do not include any guarantees from wenglor with regard to the described procedures or specific product characteristics.
- wenglor assumes no liability for printing errors or other inaccuracies contained in these operating instructions unless wenglor was verifiably aware of such errors at the point in time at which the operating instructions were prepared.

1.4 Copyrights

- The contents of these instructions are protected by copyright law.
- All rights are reserved by wenglor.
- Commercial reproduction or any other commercial use of the provided content and information, in particular graphics and images, is not permitted without previous written consent from wenglor.

2 For Your Safety

2.1 Use for Intended Purpose

3D sensors project multiple stripe patterns onto the stationary measurement object. The 3D point cloud is generated on the device from this series of images and sent to the PC.

This Product Can Be Used in the Following Industry Sectors:

- Special-purpose mechanical engineering
- Heavy mechanical engineering
- Logistics
- Automotive industry
- Food industry
- Packaging industry
- Pharmaceuticals industry
- Plastics industry
- Woodworking industry
- Consumer goods industry
- Paper industry
- Electronics industry
- Glass industry
- Steel industry
- Aviation industry
- Chemicals industry
- Alternative energies
- Raw materials extraction

2.2 Use for Other than the Intended Purpose

- The product may be used only with accessories supplied or approved by wenglor, or in combination with approved products. A list of approved accessories and combination products can be found at www.wenglor.com on the product detail page.



⚠ DANGER

Risk of personal injury or property damage in case of use for other than the intended purpose!

Use for other than the intended purpose may lead to hazardous situations.

→ Observe instructions regarding use for intended purpose.

2.3 Personnel Qualifications

- Suitable technical training is a prerequisite.
- In-house electronics training is required.
- Trained personnel who use the product must have (permanent) access to the operating instructions.



⚠ DANGER

Risk of personal injury or property damage in case of incorrect initial start-up and maintenance!

Personal injury and damage to equipment may occur.

→ Adequate training and qualification of personnel

2.4 Modification of Products

⚠ DANGER

Risk of personal injury or property damage if the product is modified!

Personal injury and damage to equipment may occur. Noncompliance may result in loss of the CE and/or UKCA mark and voiding of the warranty.

→ Modification of the product is not permitted

2.5 Repair

NOTICE

Repairs Must Be Performed Only by Qualified Personnel

The device may only be repaired by trained and authorized wenglor personnel. Any tampering with or modifications to the device by the customer will void the warranty claim against wenglor.

2.6 General Safety Precautions

INFORMATION

These instructions are an integral part of the product and must be kept on hand for the entire duration of its service life.

In the event of possible changes, the current version of the operating instructions can be found at www.wenglor.com in the product's separate download area.

Read the operating instructions carefully before using the product.

Protect the sensor against contamination and mechanical influences.

2.7 LED Warning

Observe all applicable standards and safety precautions.

NOTICE

IR radiation from this product.

2.8 Approvals and protection classes

3 Technical Data

3.1 General Information

The 3D sensors are available in various models:

- M3DS11x with a camera resolution of 5 MP, a compact housing, and small to medium measuring volumes.
- M3DS12x with a camera resolution of 12.3 MP, a compact housing, and small to medium measuring volumes.
- M3DS2xx with a camera resolution of 5 MP and a large measuring volume.

	M3DS112	M3DS113	M3DS114
Optical Data			
Working range Z	300 ... 350 mm	220 ... 320 mm	400 ... 600 mm
Z-axis measuring range	50 mm	100 mm	200 mm
Measuring range x1/y1	70 × 50 mm	130 × 110 mm	290 × 240 mm
Measuring range x2/y2	80 × 60 mm	180 × 140 mm	430 × 360 mm
Z resolution	0.003 ... 0.0056 mm	0.006 ... 0.012 mm	0.035 ... 0.080 mm
Resolution x1/y1	0.030 × 0.030 mm	0.054 × 0.054 mm	0.120 × 0.120 mm
Resolution x2/y2	0.035 × 0.035 mm	0.075 × 0.075 mm	0.170 × 0.170 mm
Camera resolution	5 MP		
Number of pixels	2448 × 2048 px		
light source	LED (blue)		
wavelength	457 nm		
Service life (ambient temperature = +25 °C)	20,000 h [1]		
Risk group (EN 62471)	2		
ambient conditions			
temperature range	0 ... 40 °C		
storage temperature	-5 ... 70 °C		
Max. permissible ambient light	5,000 lux		
EMC	DIN EN 61000-6-2; 61000-6-4		
Humidity	5 ... 95%, non-condensing		
Electrical Specifications			
supply voltage	18 ... 30 V DC		
Max. Current Consumption (Ub = 24 V)	3.5 A		
recording time	0.22 ... 0.5 s [2]		
Number of inputs/outputs	4		
Short-circuit proof	Yes		
reverse polarity protected	Yes		
interface	Ethernet TCP/IP		
transmission speed	1 ... 10 Gbit/s [3]		
protection class	III		
Mechanical Specifications			
setting method	web server		
housing material	Aluminum, anodized; Plastic, PA6		
optic cover	Plastic, PMMA		
degree of protection	IP67 [3]		

	M3DS112	M3DS113	M3DS114
Connection type (Power/I/O)	M12×1, 12-pin		
Ethernet connection type	M12×1, 8-pin, X-coded		
Safety Technology Data			
MTTFd (EN ISO 13849-1)	71.35 a		

	M3DS122	M3DS123	M3DS124
Optical Data			
Z-axis working range	255 ... 305 mm	220 ... 320 mm	270 ... 470 mm
Z-axis measuring range	50 mm	100 mm	200 mm
Measuring range x1/y1	65 × 50 mm	120 × 90 mm	260 × 190 mm
Measuring range x2/y2	75 × 55 mm	170 × 130 mm	440 × 320 mm
Z-axis resolution	0.005 ... 0.006 mm	0.007 ... 0.013 mm	0.027 ... 0.077 mm
Resolution x1/y1	0.017 × 0.017 mm	0.032 × 0.032 mm	0.065 × 0.065 mm
Resolution x2/y2	0.0196 × 0.0196 mm	0.044 × 0.044 mm	0.105 × 0.105 mm
Camera resolution	12.3 MP		
Number of pixels	4096 × 3000 px		
light source	LED (blue)		
wavelength	457 nm		
Service life (ambient temperature = +25 °C)	20,000 h [1]		
Risk group (EN 62471)	2		
ambient conditions			
temperature range	0 ... 40 °C		
storage temperature	-5 ... 70 °C		
Max. permissible ambient light	5,000 lux		
EMC	DIN EN 61000-6-2; 61000-6-4		
Humidity	5 ... 95%, non-condensing		
Electrical Specifications			
supply voltage	18 ... 30 V DC		
Max. current consumption (Ub = 24 V)	3.5 A		
recording time	0.4 ... 0.9 s [2]		
Number of inputs/outputs	4		
Short-circuit proof	Yes		
reverse polarity protected	Yes		
interface	Ethernet TCP/IP		
transmission speed	1 ... 10 Gbit/s [3]		
protection class	III		
Mechanical Specifications			
setting method	web server		
housing material	Aluminum, anodized; Plastic, PA6		
optic cover	Plastic, PMMA		
degree of protection	IP67 [3]		
Connection type Power/I/O	M12×1, 12-pin		
Ethernet connection type	M12×1, 8-pin, X-coded		

	M3DS122	M3DS123	M3DS124
Safety Technology Data			
MTTFd (EN ISO 13849-1)	71.35 a		

	M3DS216	M3DS217	M3DS218
Optical Data			
Z-axis working range	1050 ... 1450 mm	1,550 ... 2,050 mm	1,750 ... 3,050 mm
Z-axis measuring range	400 mm	500 mm	1,300 mm
Measuring range x1/y1	590 × 450 mm	870 × 670 mm	1,300 × 1,220 mm
Measuring range x2/y2	650 × 560 mm	1110 × 870 mm	1,300 × 1,300 mm
Z-axis resolution	0.050 ... 0.090 mm	0.070 ... 0.100 mm	0.330 ... 0.360 mm
Resolution x1/y1	0.240 × 0.240 mm	0.350 × 0.350 mm	0.620 × 0.620 mm
Resolution x2/y2	0.320 × 0.320 mm	0.450 × 0.450 mm	1.000 × 1.000 mm
Camera resolution	5 MP		
Number of pixels	2448 × 2048 px		
light source	LED (blue)		
wavelength	457 nm		
Service life (ambient temperature = +25 °C)	20,000 h [1]		
Risk group (EN 62471)	2		
ambient conditions			
temperature range	0 ... 40 °C		
storage temperature	-5 ... 70 °C		
Max. permissible ambient light	5,000 lux		
EMC	DIN EN 61000-6-2; 61000-6-4		
Humidity	5 ... 95%, non-condensing		
Electrical Specifications			
supply voltage	18 ... 30 V DC		
Max. current consumption (Ub = 24 V)	4 A		
recording time	0.22 ... 0.5 s [2]		
Number of inputs/outputs	4		
Short-circuit-proof	Yes		
reverse polarity protected	Yes		
interface	Ethernet TCP/IP		
transmission speed	1 ... 10 Gbit/s [3]		
protection class	III		
Mechanical Specifications			
setting method	web server		
housing material	Aluminum, anodized; Plastic, ABS		
optic cover	Plastic, PMMA		
degree of protection	IP67 [3]		
Connection type (power supply)	M12×1, 5-pin		
Connection type, digital I/O	M12×1, 12-pin		
Connection type: Ethernet	M12×1, 8-pin, X-coded		
Safety Technology Data			

	M3DS216	M3DS217	M3DS218
MTTFd (EN ISO 13849-1)	71.35 a		

[1] The service life depends on the LED. If the LED is not in continuous operation, the service life increases accordingly.

[2] At a transmission speed of 10 Gbit/s and an exposure time of 10,000 µs.

[3] Valid only if all plugs are connected to or sealed with cables or caps of the corresponding protection class.

3.2 Warm-Up Phase

The sensor requires 30-40 seconds to start up.

Stable operation is achieved after 5-10 minutes, depending on the ambient temperature and type of installation.

3.3 Factory Settings

		M3DS11x	M3DS2xx
Pin Function	I/O1	—	
	I/O2	—	
	I/O3	Sync Out	Sync Out
	I/O4	Sync In	Sync In
Settings Inputs/Outputs	I/O1	Operating voltage active, auxiliary load enable	Operating voltage active, auxiliary load enable
	I/O2	Operating voltage active, auxiliary load enable	Operating voltage active, auxiliary load enable
	I/O3	Operating voltage active, auxiliary load enable	Operating voltage active, auxiliary load enable
	I/O4	Operating voltage active, auxiliary load enable	Operating voltage active, auxiliary load enable
3D	exposure time	15,000 µs	20,000 µs
	Pattern mode	Stripe	Stripe
	LED power	50%	50%
interface	IP Address	192.168.100.1	192.168.100.1
	Subnet mask	255.255.255.0	255.255.255.0
	Control Port	32000	32000
	TCP Port	32001	32001
	MAC Address	See website	See website

3.4 Visual Fields

M3DS1xx

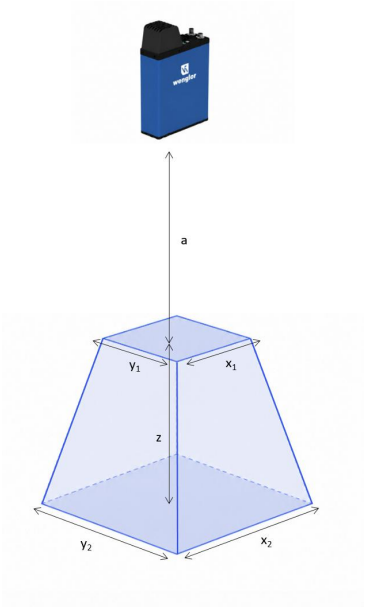

sensor	Visual Field Start (x1 x y1)	Visual field end (x2 x y2)	Measuring range (height, z)	Working distance a
M3DS112	70 × 50 mm	80 × 60 mm	50 mm	300 mm
M3DS113	130 × 110 mm	180 × 140 mm	100 mm	220 mm
M3DS114	290 × 240 mm	430 × 360 mm	200 mm	400 mm
M3DS122	65 × 50 mm	75 × 55 mm	50 mm	255 mm
M3DS123	120 × 90 mm	170 × 130	100 mm	220 mm
M3DS124	260 × 190 mm	440 × 320	200 mm	270 mm

M3DS2xx

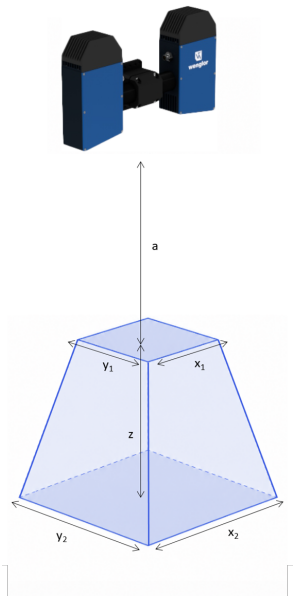

sensor	Visual field start (x1 x y1)	Visual field end (x2 x y2)	Measuring range (height, z)	Working distance a
M3DS216	590 × 450 mm	650 × 560 mm	400 mm	1050 mm
M3DS217	870 × 670 mm	1,110 × 870 mm	500 mm	1550 mm
M3DS218	1,300 × 1,220 mm	1300 × 1300 mm	1,300 mm	1,750 mm

3.5 Housing Dimensions

M3DS1xx

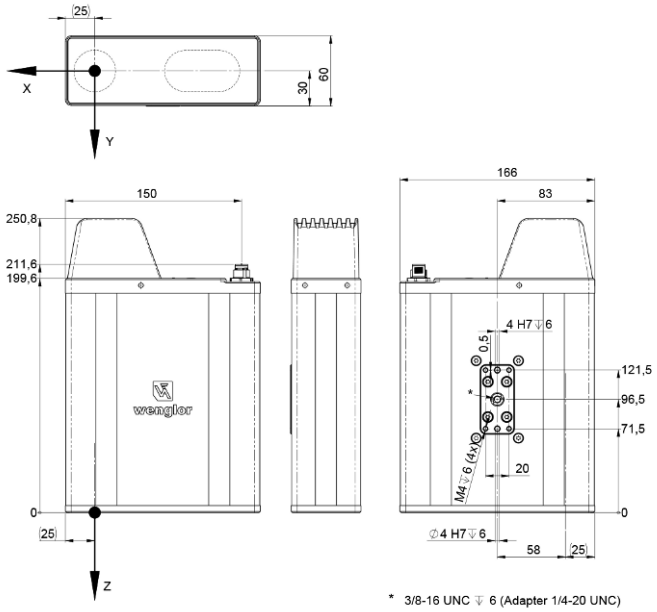

Dimensions in mm (1 mm = 0.03937 inch)

M3DS216

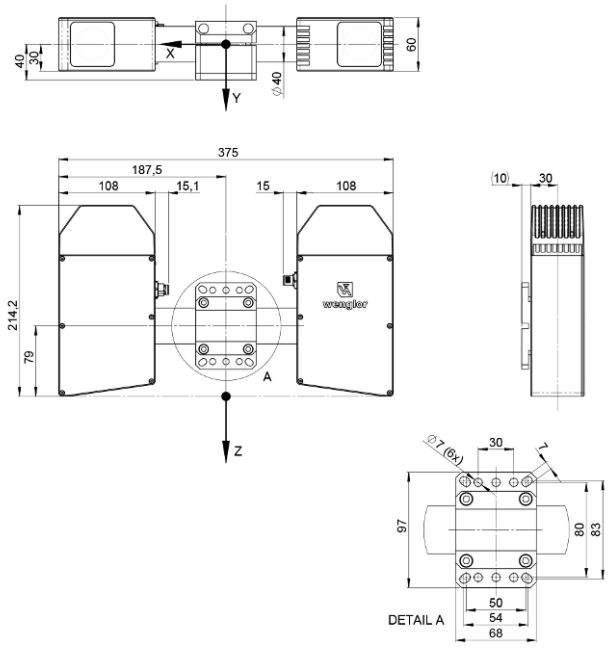

Dimensions in mm (1 mm = 0.03937 inch)

M3DS217

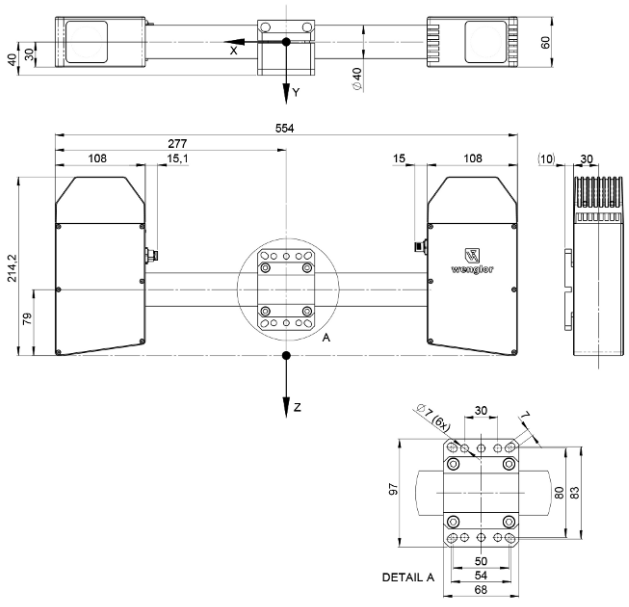

Dimensions in mm (1 mm = 0.03937 inch)

M3DS218

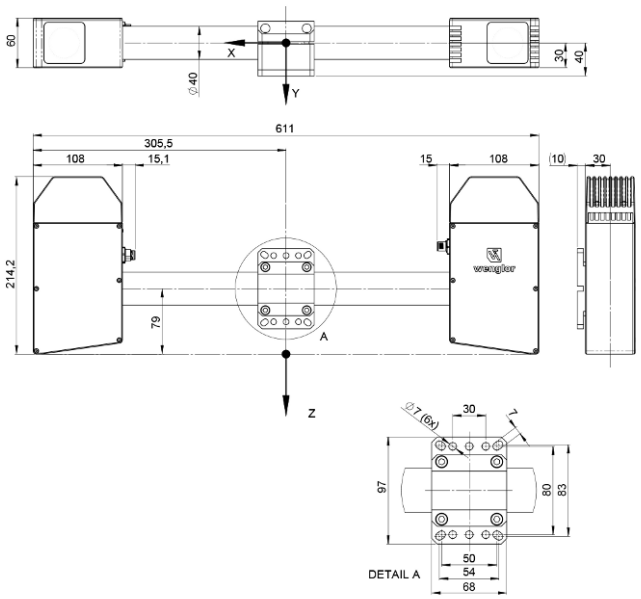

Dimensions in mm (1 mm = 0.03937 inch)

3.6 Structure

M3DS1xx

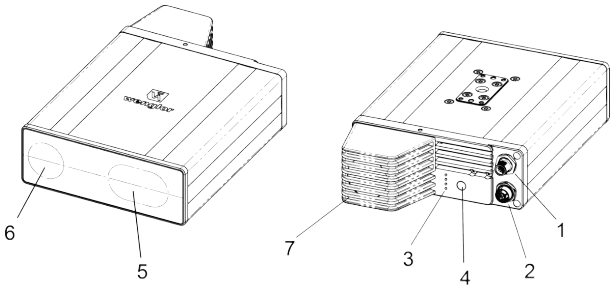

1	Power / Digital I/O Plug
2	Ethernet plug
3	Status LEDs
4	Device button
5	light emission
6	receiver
7	Fan

M3DS2xx

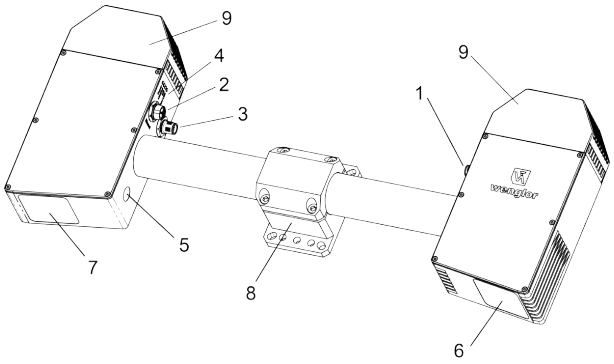

1	Power/Digital I/O Plug
2	Ethernet plug
3	I/O plug
4	Status LEDs
5	Device button
6	light emission
7	receiver
8	mounting clamp
9	Fan

3.7 Control panel

A22

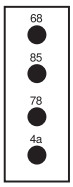

78 = Status module
85 = Link/Act LED
4a = User LED
68 = Power LED

3.8 Complementary Products

wenglor offers you the right connection and mounting technology as well as other accessories for your product. You can find this at www.wenglor.com on the product details page at the bottom.

3.9 Scope of delivery

- Commissioning instructions
- Mounting Clamp (M3DS2xx only)

4 Transport and Storage

4.1 Transport

Upon receipt of shipment, the goods must be inspected for damage in transit. In the case of damage, conditionally accept the package and notify the manufacturer of the damage. Then return the device, making reference to damage in transit.

4.2 Storage

The following points must be taken into consideration with regard to storage:

- Do not store the product outdoors.
- Store the product in a dry, dust-free place.
- Protect the product against mechanical impacts.
- Protect the product against exposure to direct sunlight.



NOTICE

Risk of property damage in case of improper storage!

The product may be damaged.

→ Storage instructions must be complied with.

5 Installation and Electrical Connection

5.1 Installation

- Protect the product from contamination during installation.
- Observe all applicable electrical and mechanical regulations, standards, and safety rules.
- Protect the product from mechanical impact.
- Ensure that the sensor is mechanically secure during installation.
- Torque specifications must be observed; see the " Tightening Torques" section.
- The product should not be exposed to vibrations, as these can affect the measurement.
- The power supply should be connected directly and be as short as possible:
  - Max. Ethernet cable length (10 Gbit): 10 m
  - Max. Ethernet cable length (1 Gbit): 30 m
- To ensure adequate air circulation, leave some space around the device and do not cover the fan or its air vents.
- Adequate heat dissipation for the device must be ensured. This can be achieved, for example, by using a metal connection between the sensor housing and the mounting base.



⚠ CAUTION

Danger if device temperature is too high

It is essential to ensure that the maximum unit temperature of 80 °C is not exceeded.



NOTICE

Risk of property damage in case of improper installation!

The product may be damaged!

→ Comply with installation instructions.



⚠ CAUTION

Risk of personal injury or property damage during installation!

Personal injury and damage to the product may occur.

→ Ensure a safe installation environment.

5.1.1 Tightening Torques

To ensure trouble-free operation, the following tightening torques must be observed (see section Structure [▶ 15]):

connection type	Tightening Torques
M12 Connection Cable for Power/I/O (Plug 1)	See the corresponding cable data sheet
M12 I/O connection cable (plug 3)	See the corresponding cable data sheet
M12 Ethernet connection cable (plug 2)	See the corresponding cable data sheet
M3DS1xx: M4 mounting (threaded)	2.5 Nm (min. insertion depth: 4 mm)
M3DS2xx: M6 mounting (threaded)	8 Nm

5.2 Adjustment

Shading and Obstruction

NOTICE

Under certain conditions, shading may occur.

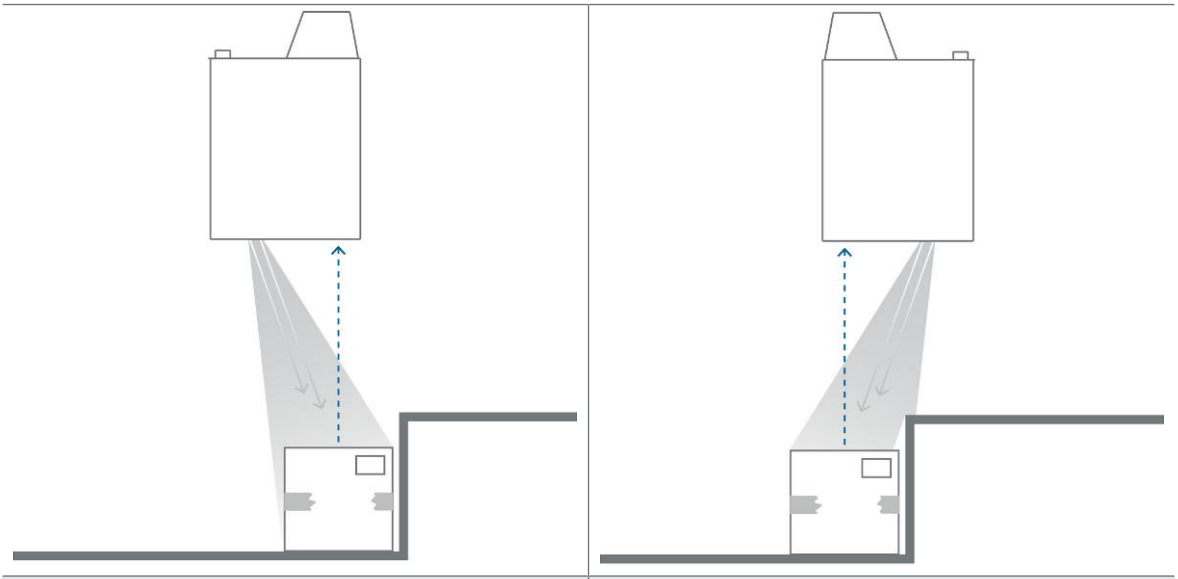

Measurement without obstruction: The light beam covers the entire object.	The field of view is restricted: The object cannot be fully captured.

5.3 Electrical Connection

- Wire the camera according to the connection diagram
- Turn on the supply voltage

⚠ DANGER

Risk of personal injury or property damage due to electric current.

Live parts can cause injury to people and damage to equipment.

→ The electrical device must only be connected by qualified personnel.

NOTICE

Operational malfunctions and defects in the device or system due to improper wiring

Improper wiring can lead to operational malfunctions and errors.

→ Follow the wiring instructions with accuracy.

NOTICE

1. The maximum permissible length of the power supply cable is 30 m. The power supply cable must be equipped with additional, suitable shielding.
2. The voltage drop across the cable must be taken into account during installation.

Pin Assignment

Depending on the 3D sensor and its application, two or three connections are required:

- Power/I/O M12; 12-pin:
  - M3DS1xx
  - M3DS2xx (optional)

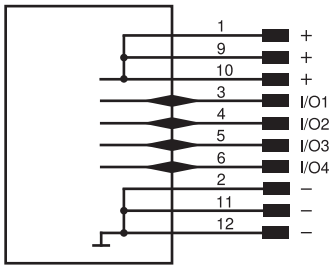

pin	Pin Function
1	Supply voltage +
2	Supply voltage 0 V
3	Input/Output 1
4	Input/Output 2
5	Input/output 3
6	Input/Output 4
9	Supply voltage +
10	Supply voltage +
11	Supply voltage 0 V
12	Supply voltage 0 V

- Power supply: M12; 5-pin
  - M3DS2xx

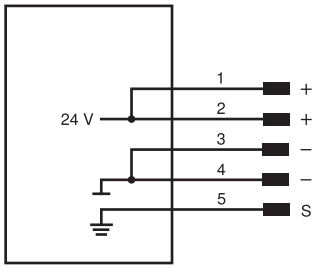

pin	Pin Function
1	Supply voltage +
2	Supply Voltage +
3	Supply voltage 0 V
4	Supply voltage 0 V
5	Shield

- Ethernet: M12; 8-pin plug, x-coded for 1...10 Gbit
  - M3DS1xx
  - M3DS2xx

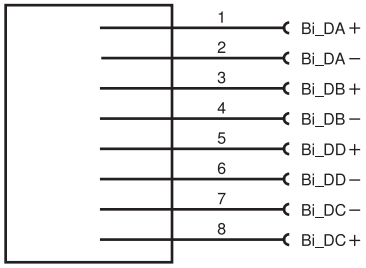

pin	Pin function
1	Gigabit Ethernet bidirectional data line A+
2	Ethernet Gigabit bidirectional data line A–
3	Ethernet Gigabit bidirectional data line B+
4	Ethernet Gigabit bidirectional data line B–
5	Ethernet Gigabit bidirectional data line D+
6	Ethernet Gigabit bidirectional data line D–
7	Ethernet Gigabit bidirectional data line C–
8	Ethernet Gigabit bidirectional data line C+

5.4 Diagnostics

Status LEDs (see section Control panel [▶ 16])

LED	Designation	Status	Function
68	Power	Blue	Operating voltage on
		Off	Operating status off
85	Link/Act	Green	Link present (10 Gbit)
		Orange	Link present (2.5 ... 5 Gbit)
		Red	Link present (100 ... 1000 Gbit)
		Off	No Ethernet device connected
78	Module status (MS)	Green	Device is operating
		Red	Device error
		Off	Device does not start
4a	User LED	Off	Controlled via SDK command
		Green	
		Red	
		Orange	

5.5 Troubleshooting (Device Status)

Message	Level	Description
High CPU load	Warning	Active when CPU load is high. Check the device's website (Diagnostics).
High RAM	Warning	Active when RAM usage is high. Check the device's website (Diagnostics).

Message	Level	Description
High LAN Ethernet	Warning	Active when LAN Ethernet usage is high. Check the device's website (Diagnostics).
High temperature	Warning	Active when the temperature is high. Check the device's website (Diagnostics).
Data buffer	Warning	Active when the data buffer is heavily loaded. Reduce the trigger frequency, check the network, and visit the device's website (Diagnostics).
Software service crash	Error	Active when a software service crashes. Check the device status in the weHub software, check the device's website for details (if available), or restart the device.

In addition, you can download the history of the most recent 50 warnings and error messages regarding the device status (these are automatically reset after the device is restarted).

5.6 Configure LAN Network Settings

In TCP/IP networks, devices must be on the same network to communicate with each other. To do this, you may need to configure either the camera or the customer's PC.

NOTICE

Use the wenglor weHub software (see the " wenglor weHub software " section) to configure the camera's network settings.

5.6.1 Manual LAN Network Settings

The camera is shipped from the factory with the following LAN settings:

- IP address: 192.168.100.1
- Subnet mask: 255.255.255.0
- Gateway: 0.0.0.0

To connect the camera to the PC, ensure that both the camera and the PC are within the same IP address range.

Address format for IP addresses (IPv4)

	Network portion	Device portion (host portion)
IP address	192.168.100.	**001**
Subnet mask	255.255.255.	**000**

The network portion of the camera's IP address must match the network portion of the PC's IP address, but the host portion of the address must be different for the camera and the PC. By default, the IP address of the network adapter card in the PC is set to dynamic (automatic assignment). Change the setting to "static." The IP address must be different from the camera's IP address and must be unique on the network, e.g., 192.168.100.100.

NOTICE

For more information on configuring the IP address, refer to your operating system's manual.

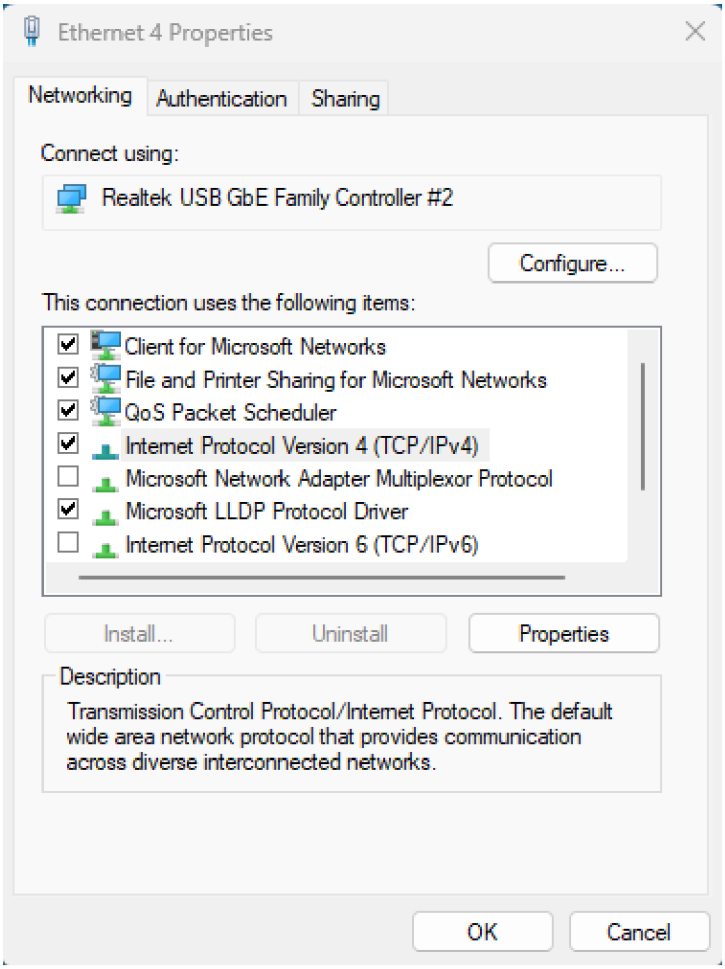

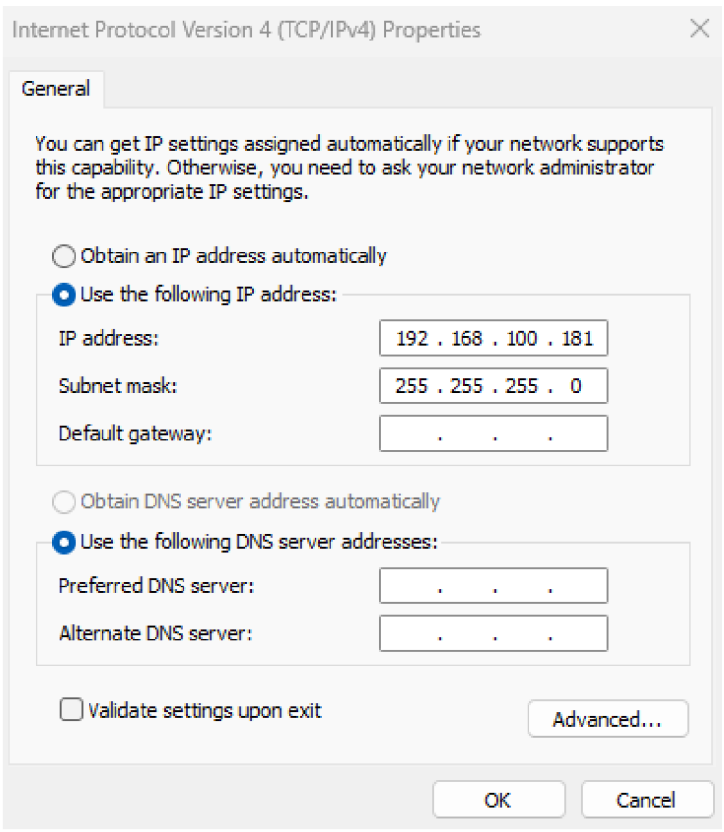

You can then access the built-in web server, which contains all global device settings (see section “ Device Website ”).

Testing the Connection Between the Camera and the PC

To test the connection between the camera and the PC, do the following:

- Ensure that power and the LAN connection are available, and wait until the boot process is complete.
- Check the LEDs
  - Supply voltage indicator → lit blue
  - Link/Act LED → lit (red, orange, green)
  - Module Status LED → lit green
- Open your browser and enter the camera's IP address (factory default: 192.168.100.1) into the browser's address bar. The website should be accessible. If the website is not accessible, check all settings and try again.

6 Settings

6.1 Trigger Behavior

NOTICE

For more information on the trigger source and how to enable digital I/O data acquisition, see the interface protocol on the M3DS product detail page.

trigger input

“SetTriggerSource=0” (or other trigger source);

“SetSensorEnable=0”

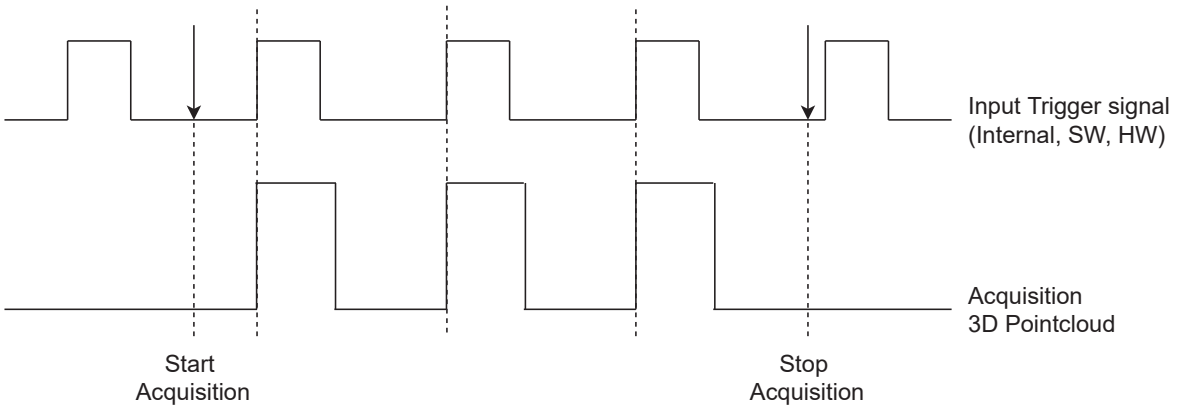

“SetTriggerSource=0” (or other trigger source)

“SetSensorEnable=1” (or 2 ... 4)

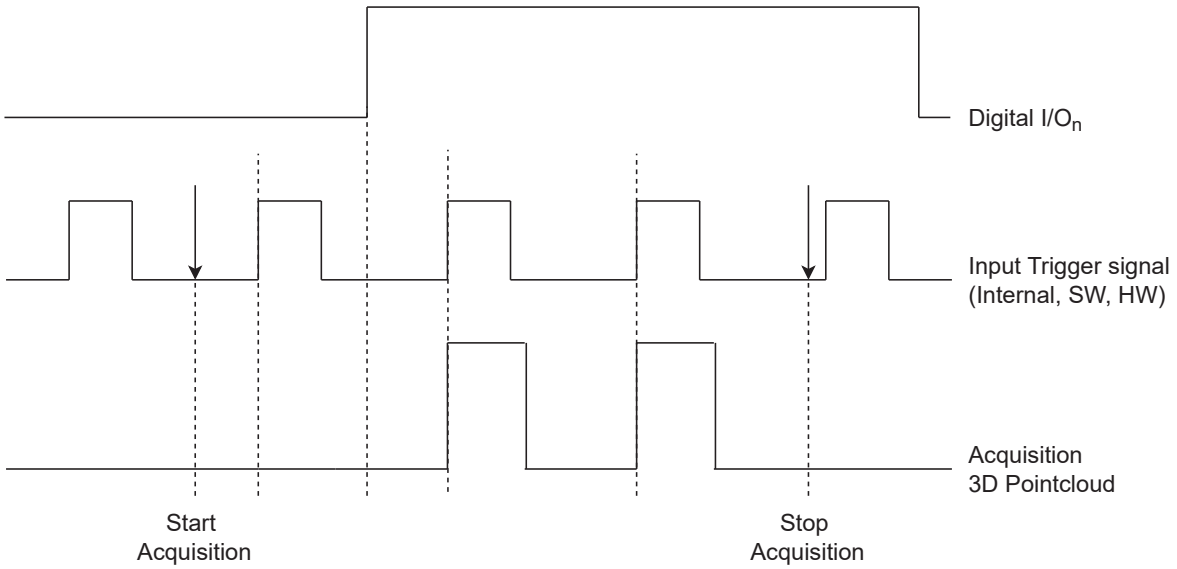

SynchOut Function

NOTICE

Due to the time required to configure the sensor's projector after recording begins, the first SyncOut pulse has a delay of a few milliseconds (typically 100 ms), which is reduced to a minimum for subsequent SyncOut pulses (typically 20–40 ms).

- SynchOut on the rising edge of the signal

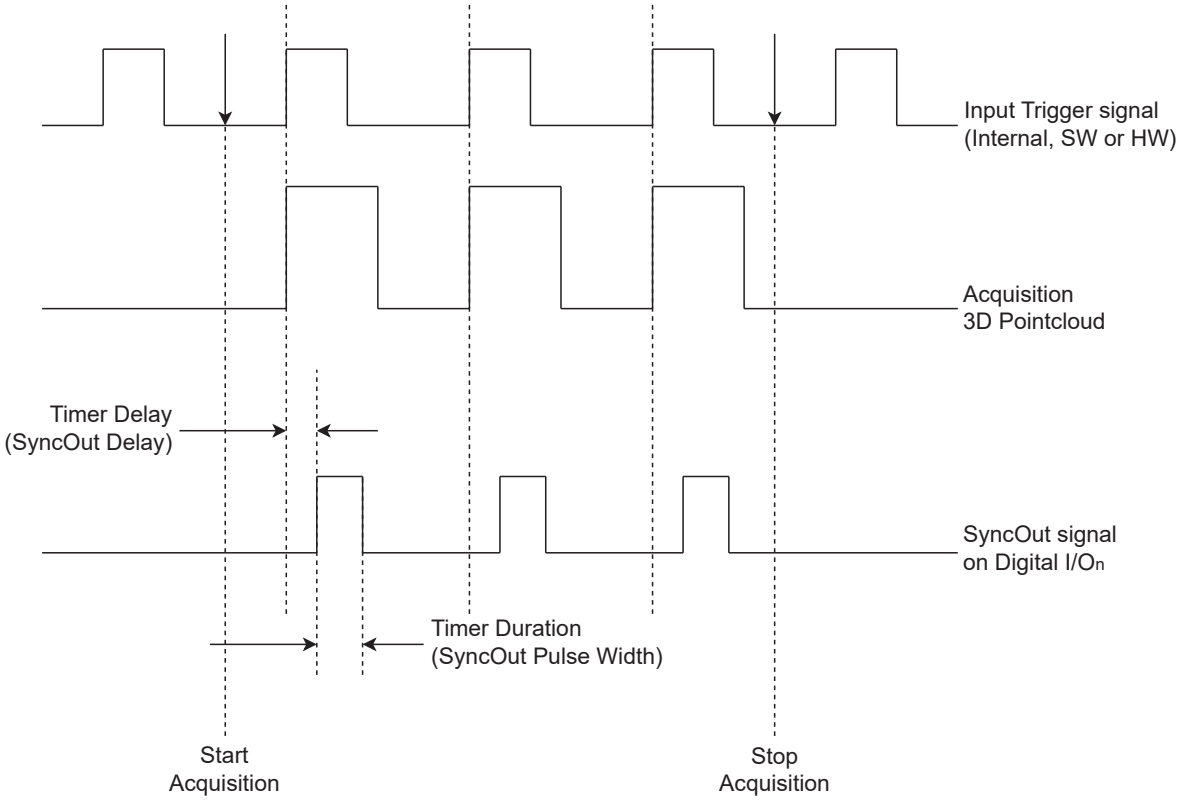

Example command sequence:

1. SetEA3LineMode=1 → Sets the IO3 pin function as a user output
2. SetEA3LineSource=2 → Sets the IO3 pin function to Timer0 (SyncOut)
3. SetTimer0Source=0 → Sets the timer's trigger point to the start of the signal (start of recording)
4. SetTimer0Duration=20000 → Sets the pulse width of the SyncOut signal in µs
5. SetTimer0Delay=10000 → Sets the timer delay in µs

- SyncOut on the falling edge of the signal

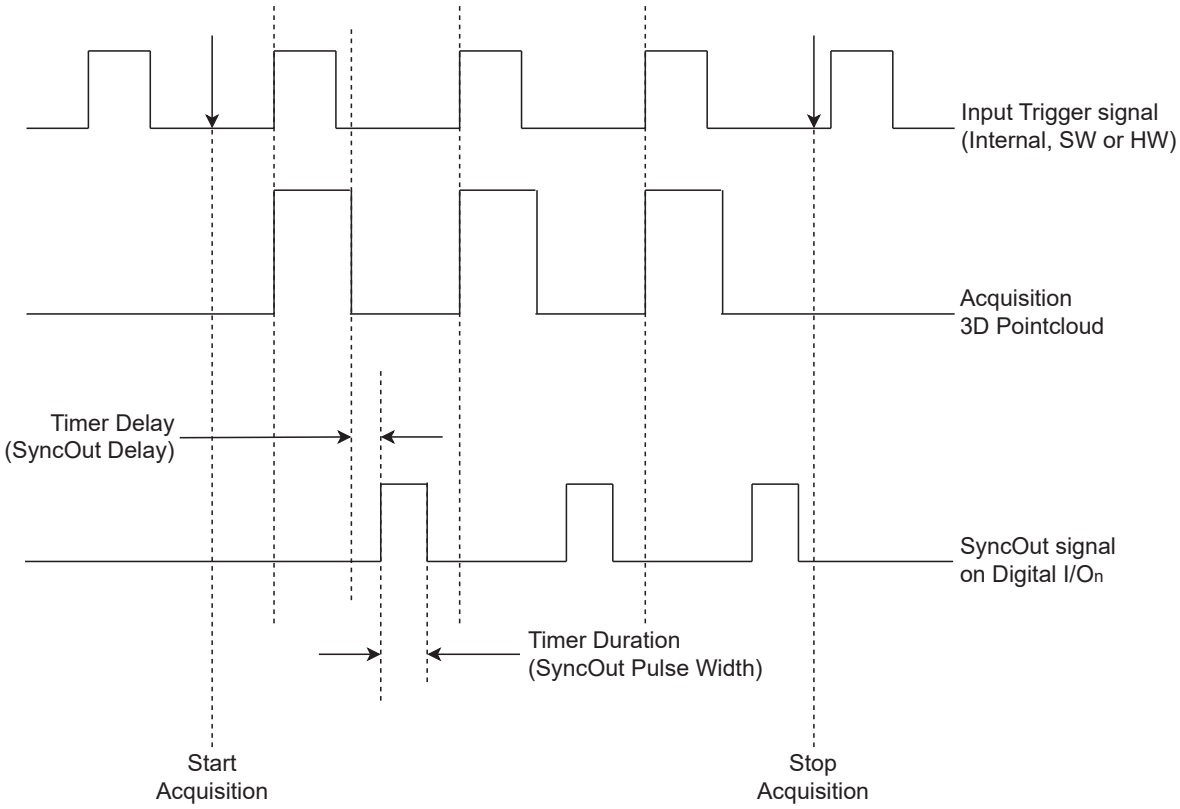

Example command sequence:

1. SetEA3LineMode=1 → Sets the IO3 pin function as a user output
2. SetEA3LineSource=2 → Sets the IO3 pin function to Timer0 (SyncOut)
3. SetTimer0Source=1 → Sets the timer's trigger point to the end of the signal (end of recording)
4. SetTimer0Duration=200000 → Sets the pulse width of the SyncOut signal in µs
5. SetTimer0Delay=100000 → Sets the timer delay in µs

- SyncOut during recording time

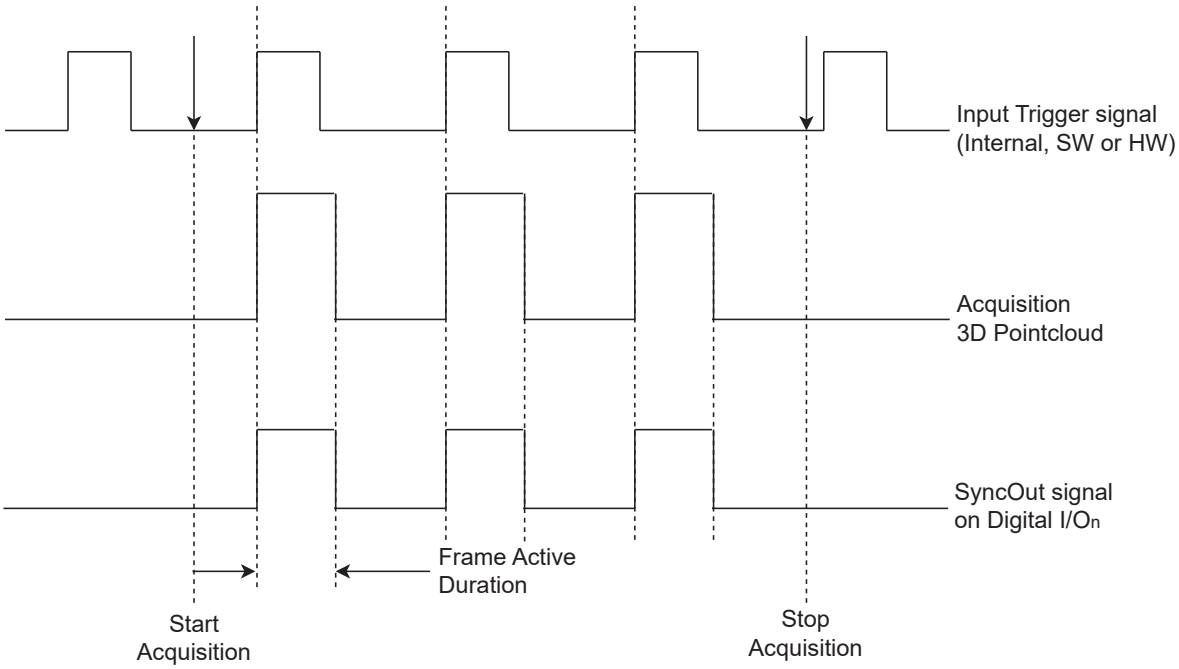

Example command sequence:

1. SetEA3LineMode=1 → Sets the IO3 pin function as a user output
2. SetEA3LineSource=0 → Sets the IO3 pin function to Sync Out as long as recording is active (the SyncOut signal remains HIGH for the duration of the recording, i.e., ExposureTimeLimit × LED Pattern (16 or 28))

NOTICE

In this mode, the “SetTimer0Duration” and “SetTimer0Delay” commands have no effect.

- SyncOut while the sensor is operating

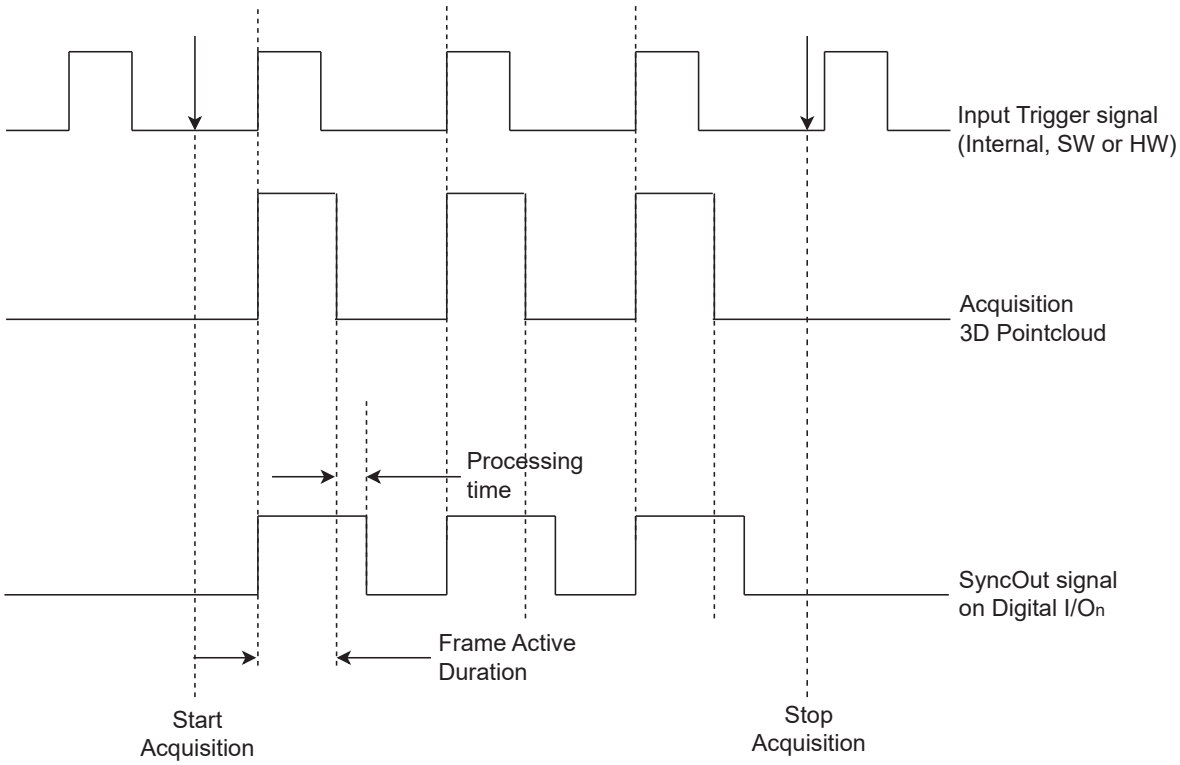

Example command sequence:

1. SetEA3LineMode=1 → Sets the IO3 pin function to User output
2. SetEA3LineSource=1 → Sets the IO3 pin function to Sync Out as long as the sensor is operating (the SyncOut signal remains HIGH as long as the sensor is receiving and processing data bursts, i.e., ExposureTimeLimit × LED Pattern + Processing Time)

NOTICE

In this mode, the “SetTimer0Duration” and “SetTimer0Delay” commands have no effect.

6.2 Device Button

Pressing and releasing the device button (see section Structure [▶ 15]) triggers different functions depending on the time intervals specified below:

Status	Duration of button press	Function
Localize	3...6 s	Starts or stops localizing
Network reset	10–15 s	Resets the Ethernet plug’s network settings to factory defaults • IP Address 192.168.100.1 • Subnet mask: 255.255.255.0 • Gateway 0.0.0.0

NOTICE

To prevent unintended changes via the device button, disable this feature on the device’s web page (see section Settings [▶ 39]).

7 Function Description

Coordinate System of the 3D Sensor

The coordinate system is a right-handed triangle and is defined as follows:

- The Z-axis runs along the optical axis on the receiver side.
- The XY plane coincides with the front face of the receiver.

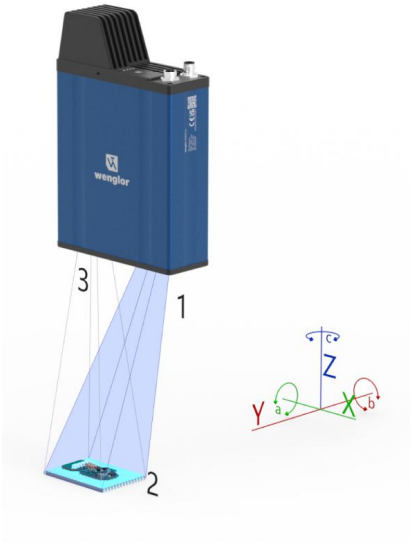

1	Light module
2	object
3	High-resolution camera

- The X-axis corresponds to the X measuring range.
- The a-axis corresponds to the rotation around the X-axis.
- The Z-axis corresponds to the Z measuring range.
- The c-axis corresponds to rotation around the Z-axis.
- The Y-axis corresponds to the Y measuring range.
- The b-axis corresponds to rotation about the Y-axis.

Operational principle

The underlying operational principle is based on triangulation (see figure above). A light module (1) projects structured patterns onto the object (2), while a camera (3) captures the reflected light. The fixed geometric arrangement of the light source, camera, and object forms a triangle that is used for spatial calculations. To generate 3D data, multiple patterns are projected sequentially onto the stationary object and captured by the camera. A high-precision point cloud is then calculated from the captured image data. This point cloud consists of numerous 3D points that represent the object's surface and can be used for inspection or measurement tasks.

8 Software

8.1 wenglor weHub

The wenglor weHub DNNF024 software makes it easy to search for and locate camera-based products on the network. It also adjusts the products' network configuration so that a connection can be established.

8.2 wenglor Vision Viewer

The wenglor Vision Viewer DNNF025 software can connect to 3D sensors, adjust camera parameters, and display point clouds and other camera images. For more information, refer to the software operating instructions.

8.3 Interfaces

3D cameras can be integrated via SDK or GenICam. For details on the interface protocols, see 3D sensors.

9 Device Website

To access the device website, enter the device's IP address directly into any supported browser (default IP address: 192.168.100.1).

NOTICE

1. Make sure that the network settings of the device and the PC match (see the section Manual LAN Network Settings [▶ 22]). Use a unique network configuration for the 3D sensor within the network.
2. The cabling throughout the network must support at least 1 Gbit/s (recommended: 10 Gbit/s).
3. Use the wenglor weHub software to discover 3D sensors, configure network settings, and access the device website. For details, refer to the wenglor weHub DNNF024 software operating instructions

The following IP addresses are reserved and are not permitted on the LAN port of the 3D sensor:

- 0.0.0.0/8
- 1.0.0.0/8
- 127.0.0.0/8
- 224.0.0.0/4
- 233.252.0.0/24
- 240.0.0.0/4
- 255.255.255.255/3

Minimum supported browser version (tested on Windows 10 (22H2) and Windows 11 (22H2) PCs):

- Chrome 108
- Firefox 108
- Microsoft Edge 108
- Chromium 111

9.1 Page Layout

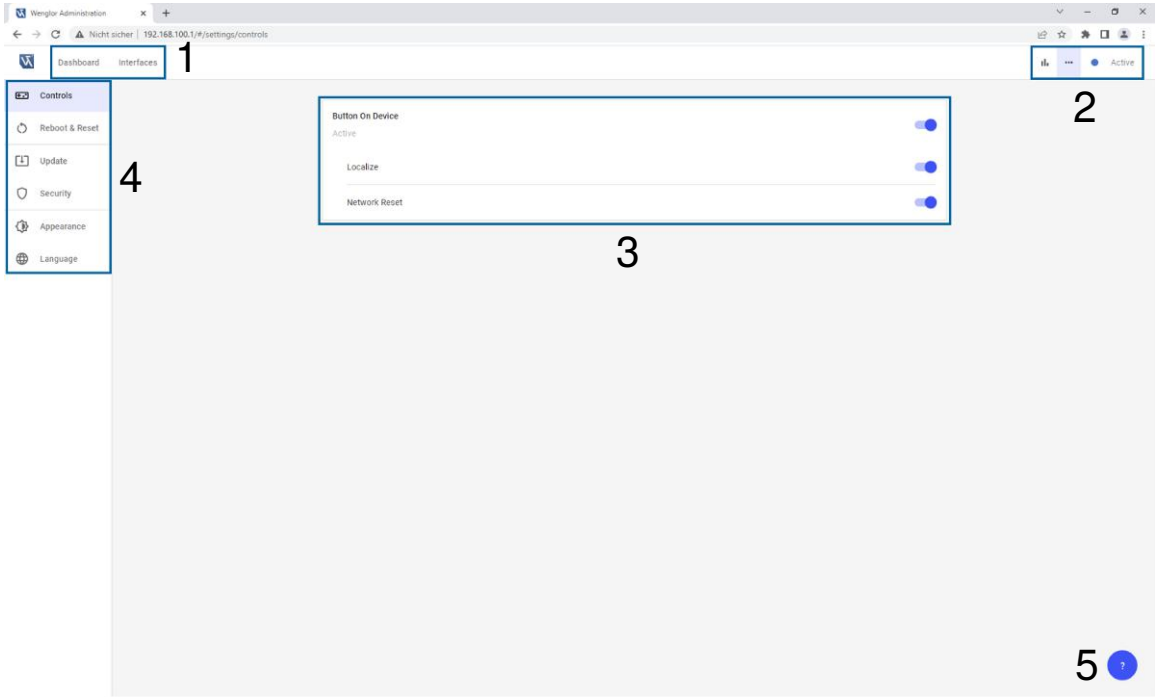

1	Tabs	2	Icon Menu Bar
3	working range	4	Page Navigation
5	Help button		

9.2 Dashboard

By default, the dashboard displays details about the 3D sensor.

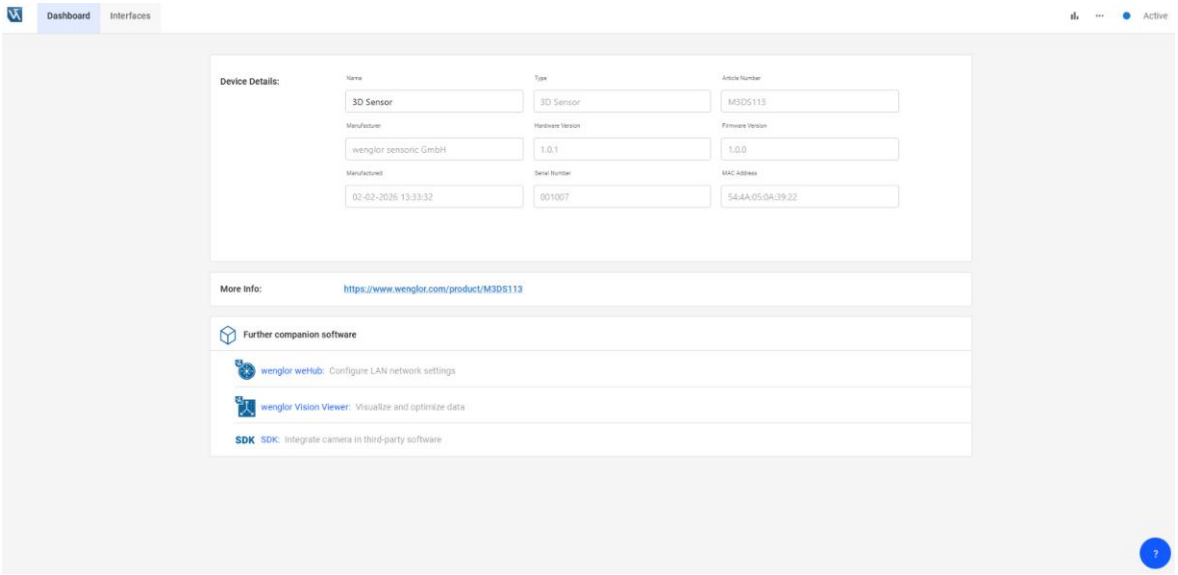

If necessary, the name can be customized (max. 63 characters)

"More Info" opens a new tab in the browser with the product details page on the wenglor website (available only with Internet access).

The “Further companion software” section contains direct links to download additional software products.

9.3 Interfaces

Open the "Interfaces" tab to view and edit all interface settings.

9.3.1 Network (LAN)

In the “Network (LAN)” page navigation, you can adjust the 3D sensor’s fixed network settings:

By default, the 3D sensor has the following network settings:

- IP address: 192.168.100.1
- Subnet mask: 255.255.255.0
- Gateway: 0.0.0.0

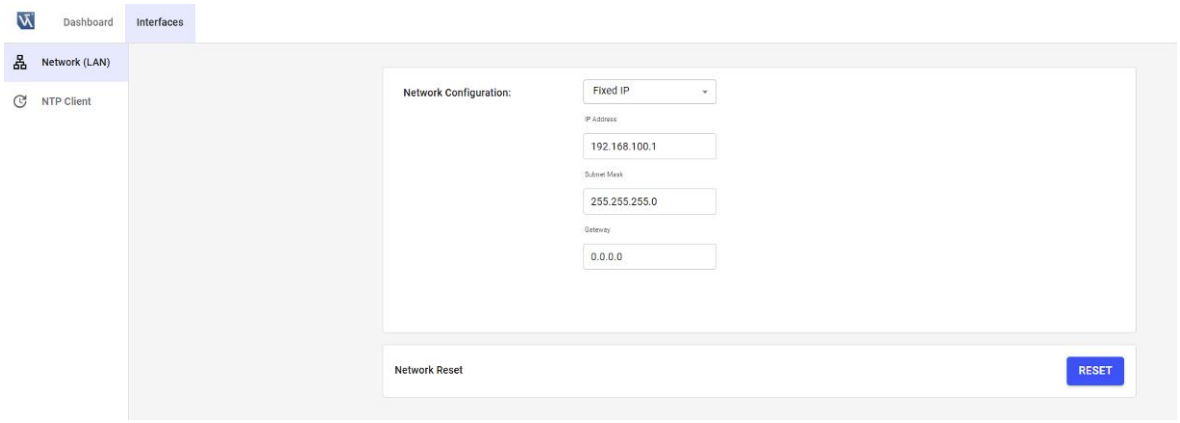

"Network Reset" restores the device's network configuration to the default settings.

NOTICE

Confirm the restart information to start the network reset. A software restart is performed automatically during the network reset.

9.3.2 NTP Client

Click “NTP Client” in the page navigation to connect to an NTP server on the LAN. By default, the NTP client is disabled, and the current date and time are indicated.

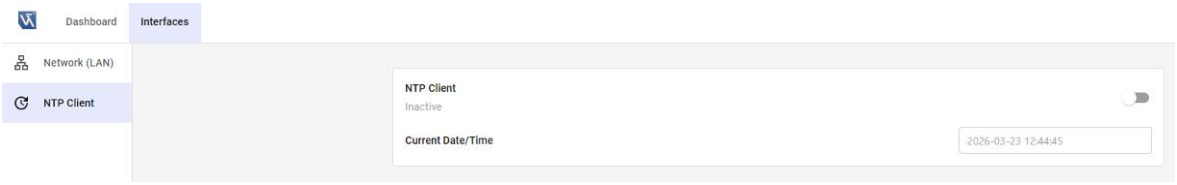

- Enable the NTP client to connect to an NTP server on the LAN.
- NTP Server: Enter the IP address of the device running the NTP server (e.g., a PC).
- Time Zone: Select the appropriate time zone.
- In Sync: Indicates whether the current date and time are synchronized with the NTP server.

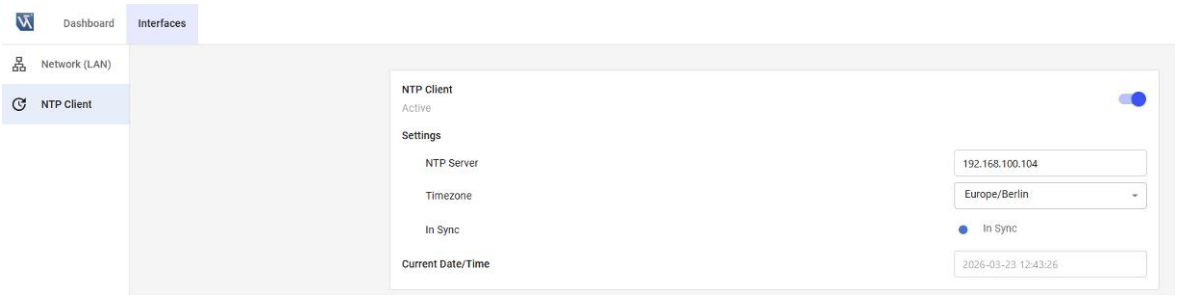

NOTICE

1. Synchronizing the date and time can take up to one minute.
2. Make sure that an NTP server is running on the LAN network that the device can access. For example, enable the NTP server available on Windows 11 PCs by opening the Registry Editor. Under “HKLM\System\CurrentControlSet\Services\W32Time\TimeProviders\NtpServer,” set the value of “Enabled” to 1.

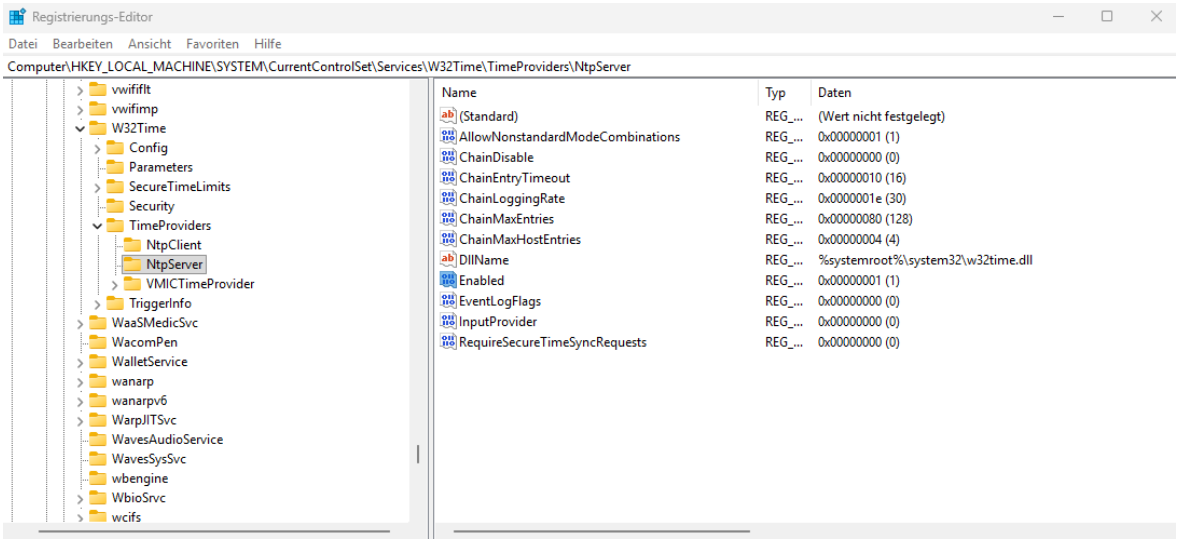

9.4 Diagnostics

Click the “Diagnostics” icon in the icon menu bar to view additional diagnostic information.

9.4.1 CPU

"CPU" in the page navigation displays the CPU utilization of the Machine Vision device for up to the last 60 seconds.

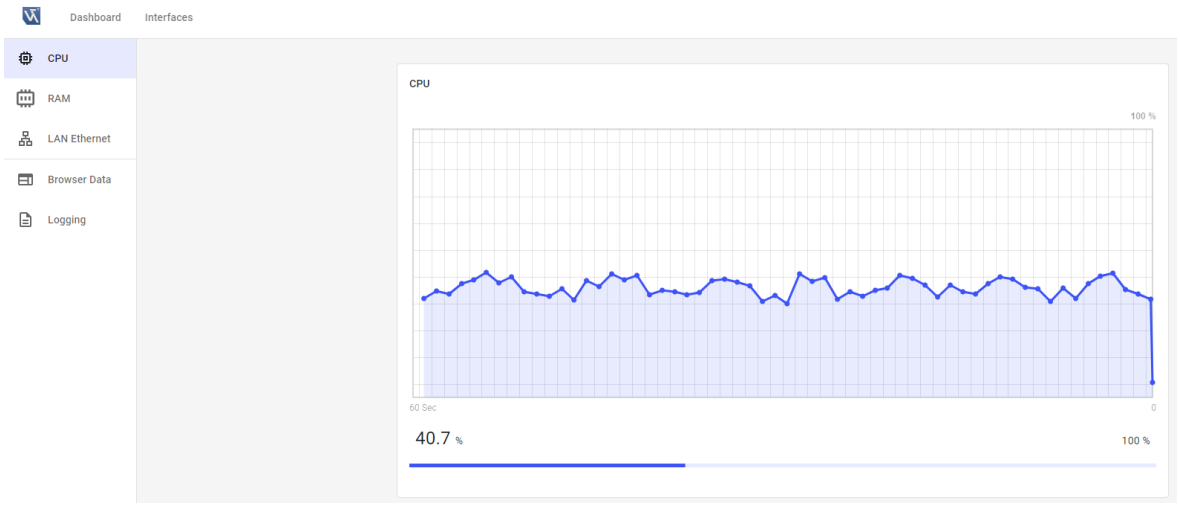

9.4.2 RAM

"RAM" in the page navigation displays the RAM usage of the Machine Vision device for up to the last 60 seconds.

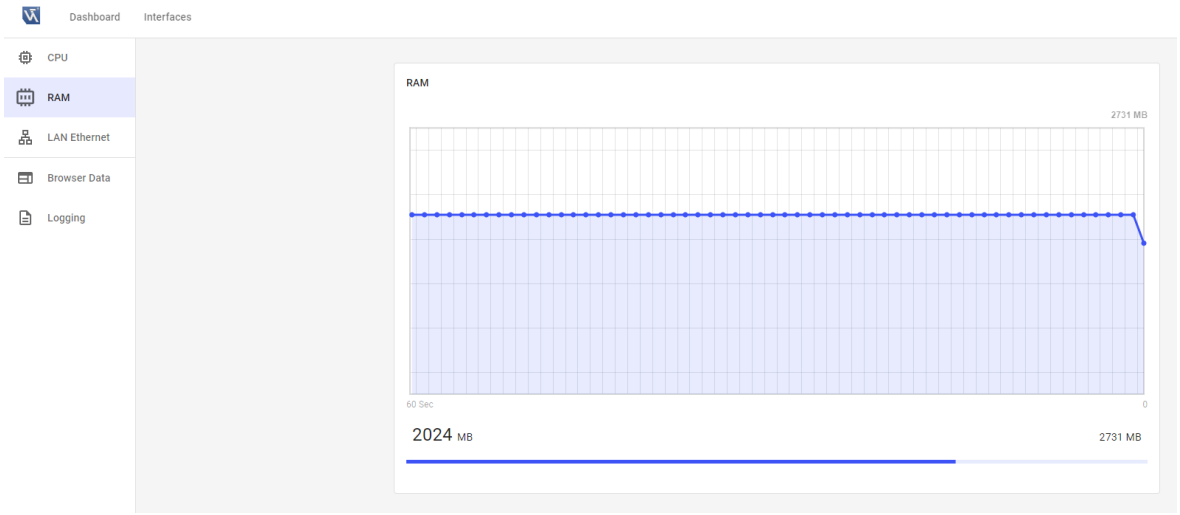

9.4.3 LAN Ethernet

"LAN Ethernet" in the page navigation displays the network load on the Machine Vision device's LAN port for up to the last 60 seconds.



9.4.4 Temperature

"Temperature" in the page navigation displays the temperature readings from all temperature sensors in the Machine Vision device for up to the last 60 seconds.

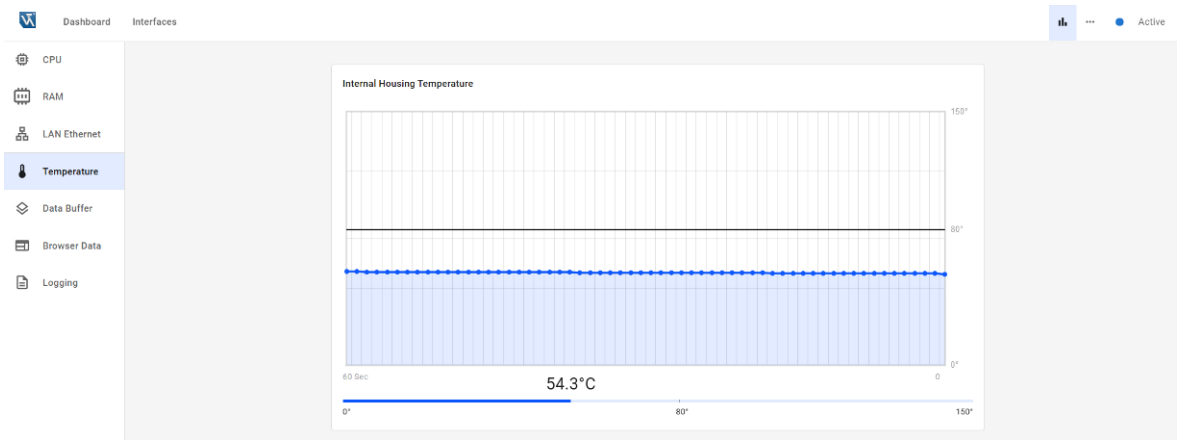

The following temperature sensors are available

- Internal Housing Temperature
- LED temperature
- Image sensor temperature
- LED housing temperature
- CPU temperature

9.4.5 Data Buffer

"Data Buffer" in the page navigation displays the data buffer usage on the device for up to the last 60 seconds. Usage increases when the captured point clouds cannot be transmitted, for example, due to a slow network connection or high trigger/capture frequencies. Avoid high data buffer values (e.g., by reducing the trigger frequency) to prevent delays in data transmission or data loss.

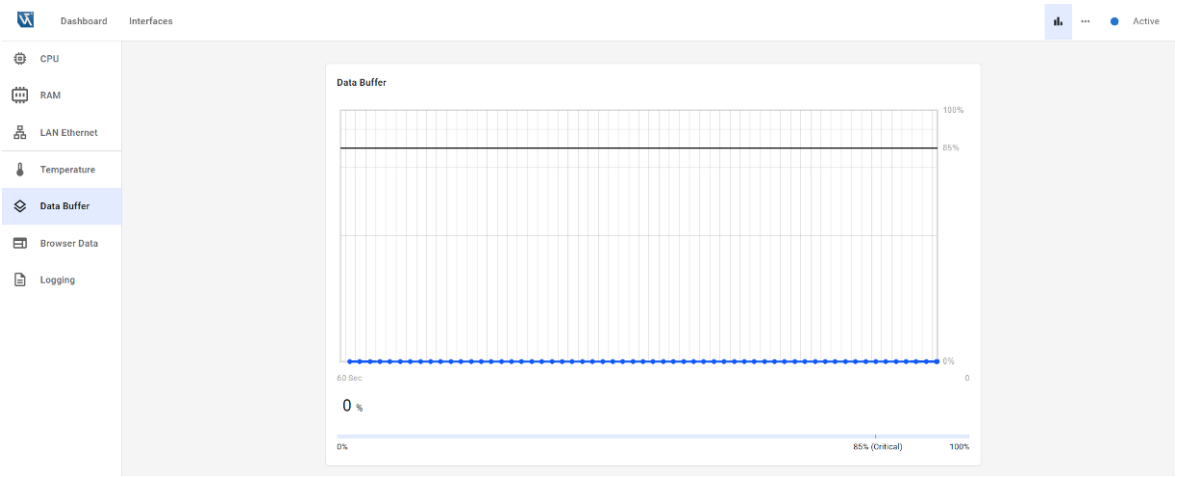

9.4.6 Browser Information

"Browser Data" in the page navigation indicates the version of the browser currently in use.



9.4.7 Logging

Using the “Logging” page in the navigation menu, you can download logging information for all of the device’s services in a ZIP file for the wenglor support and development team. If you enable “Logging,” a software restart will be performed automatically after you confirm the restart message (by default, “Logging” is disabled).

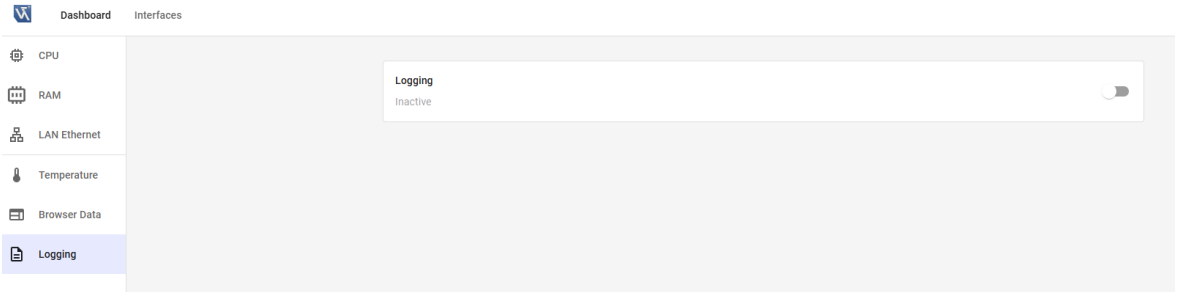

9.5 Settings

Clicking the “Settings” icon opens the following page navigation:

- **Button:** Option to enable or disable the device button function for locating and resetting the network to protect it from unwanted changes (see section Device Button [▶ 29]).

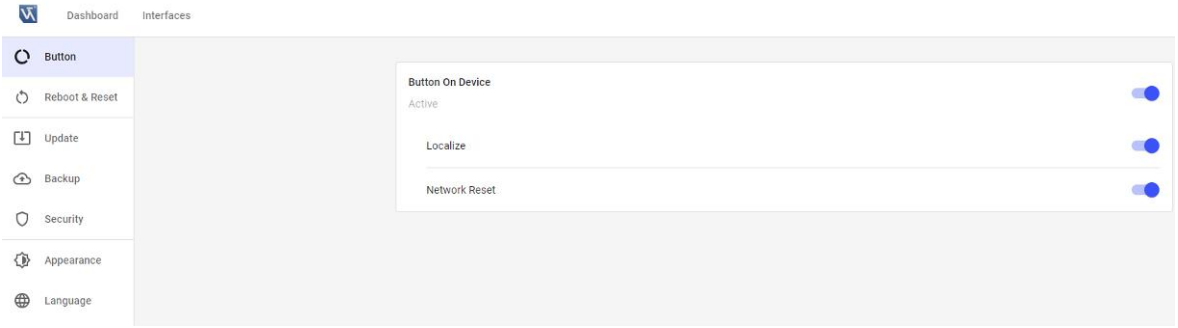

- **Reboot & Reset:** The “Reboot & Reset” menu allows you to perform a software reboot of the device. It also allows you to reset the device’s web interface settings to their default values (camera settings, such as exposure time, are not reset).

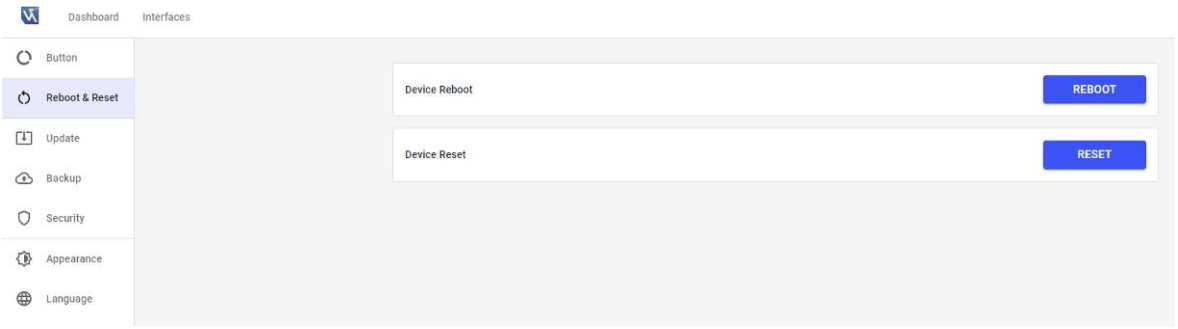

- **Update:** Update the firmware by clicking CHOOSE. Select a *.swu firmware update file. Confirm the reboot information to start the firmware update. A software reboot is performed automatically during the firmware update.

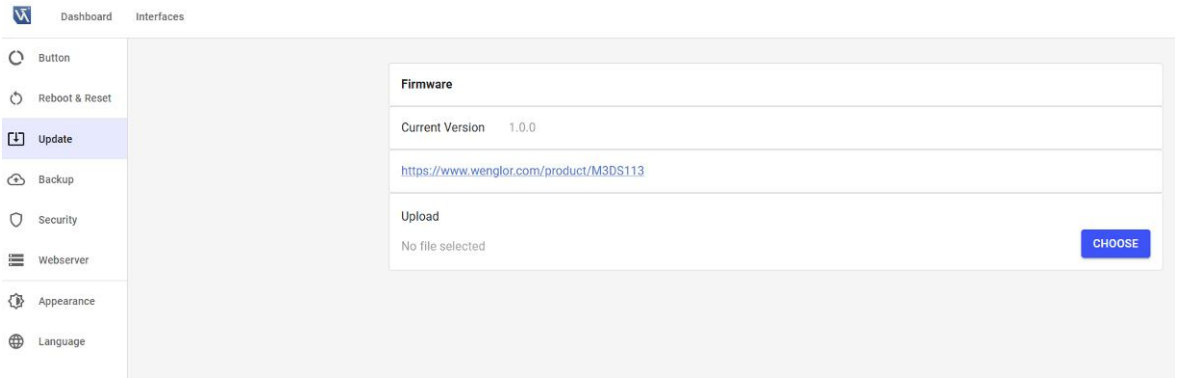

Firmware Compatibility

The firmware version number consists of three digits (e.g., firmware M3DS 1.0.0).

- Major version: The first digit changes (no compatibility).
- Feature release: The second digit is changed.
- Bug fix version: The third digit changes.

The following applies regarding the compatibility of the device website:

- With a bug fix release, the settings on the device website are preserved.
- With a feature release upgrade (the second digit increases), the device website settings are preserved.
- With a feature release downgrade (the second digit decreases), the device website settings may be reset to their default values.

NOTICE

1. A backup of the device settings for the device website is performed if the device settings change during a firmware update or downgrade (contains a maximum of one backup file).
2. Contact wenglor Support (email support@wenglor.com) to reactivate the device website settings on a compatible firmware version.

- **Backup:** The “Backup” page navigation allows you to create and restore a backup of the device website settings.
  - Backup: Creates a backup file for the device web page settings.
  - Restore: Allows you to restore a backup to the device. Restoring a backup file is only possible if the device type (part number) and firmware version match. If you upload the backup file to another device with the same part number, make sure that the same firmware version is installed on that device before restoring the backup.

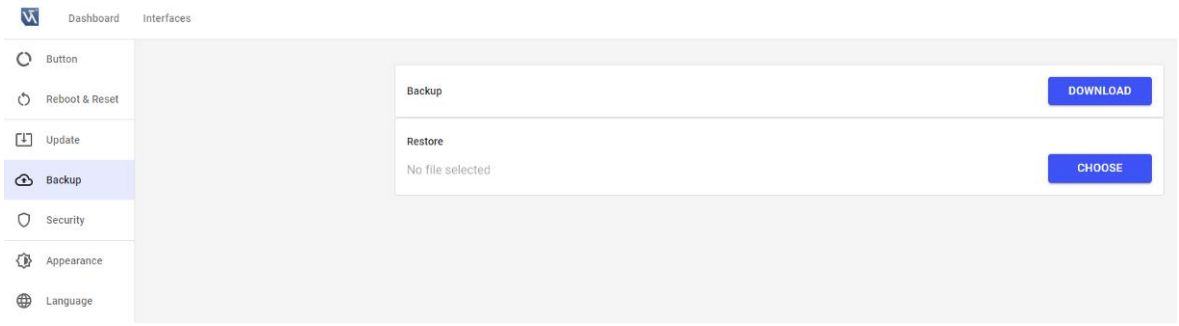

- **Security:** Option to enable or disable authentication to protect the device from unauthorized changes (see the Log In and Log Out [▶ 42] section). By default, authentication is disabled.

- **Web Server:** You can configure the web server via the “Web Server” page navigation.

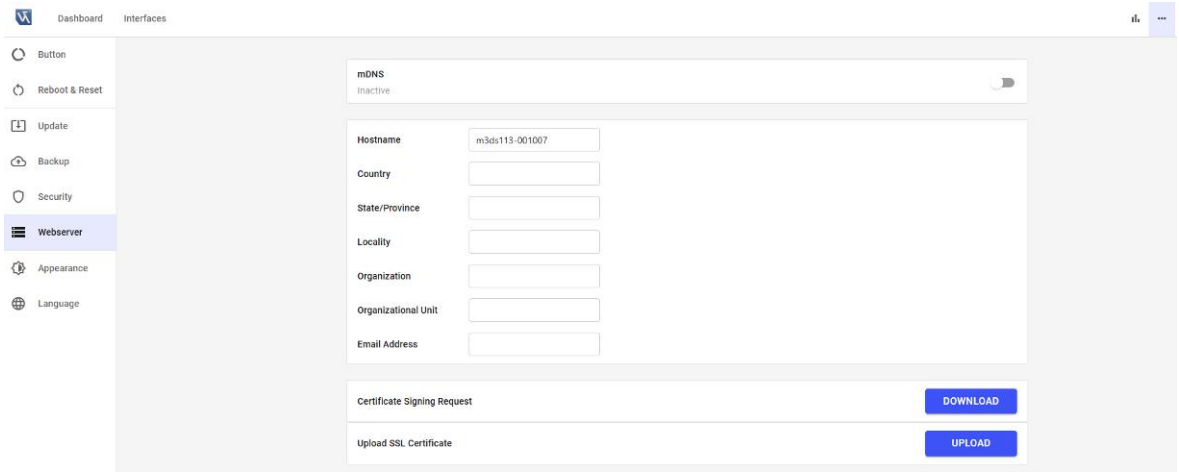

Enable mDNS to access the device's website using the hostname. By default, the hostname is "Part Number"-"Serial Number" (e.g., m3ds113-001007). Refresh the browser to see the IP address automatically redirected to the hostname in the browser's address bar (provided "Automatic Redirection" is enabled).

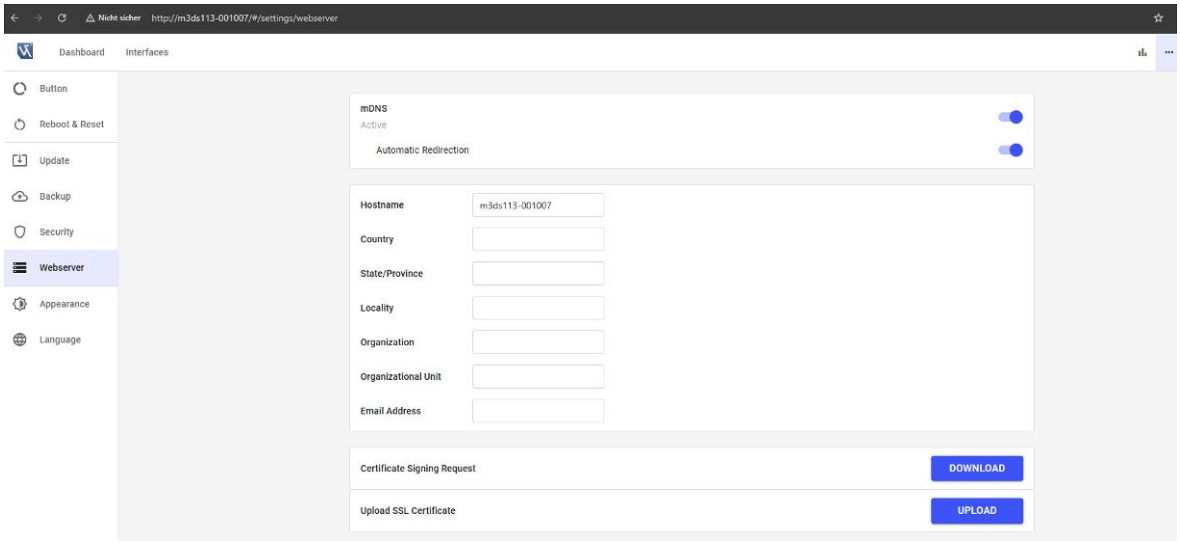

Enter your country, state/province, city, organization, organizational unit, and email address before creating the certificate signing request.

NOTICE

To generate the image processing device's SSL certificate and add it to your PC as a trusted device, please contact your IT department.

Once the SSL certificate has been successfully uploaded, the "HTTPS" indicator will appear. Enable this to access the device via HTTPS. Refresh the browser to see the automatic redirection from HTTP to HTTPS (provided that "Automatic Redirection" is enabled).

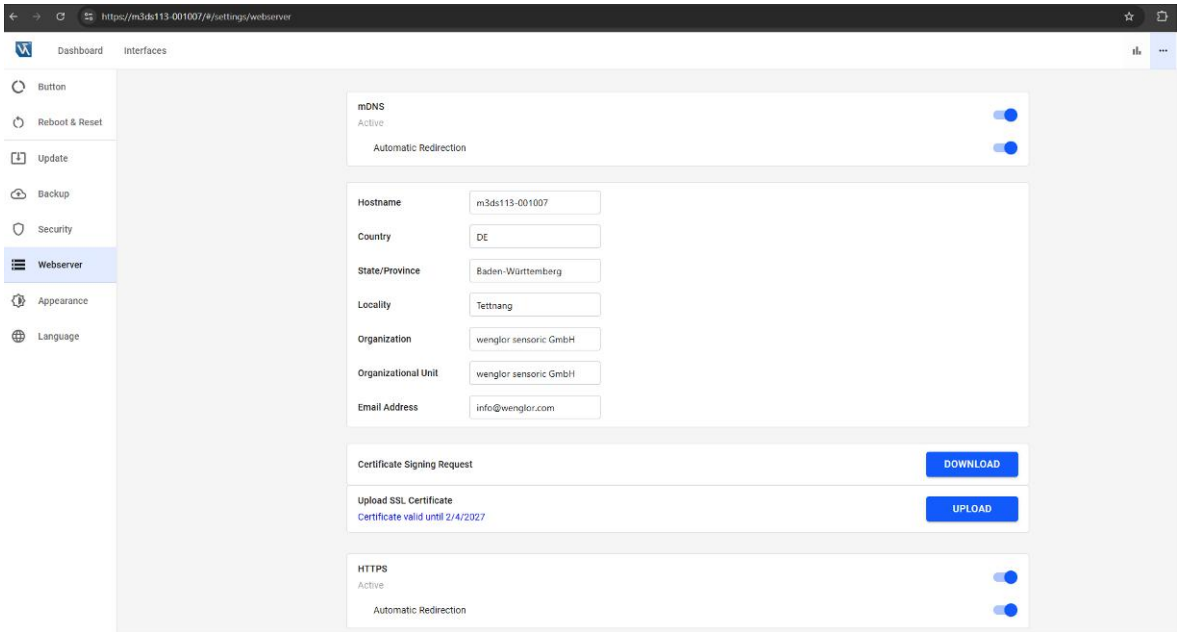

NOTICE

Clear your browser history after disabling mDNS or HTTPS so that you can access the device's website again.

- **Appearance:** Defines if dark theme is on or off.

Dark theme	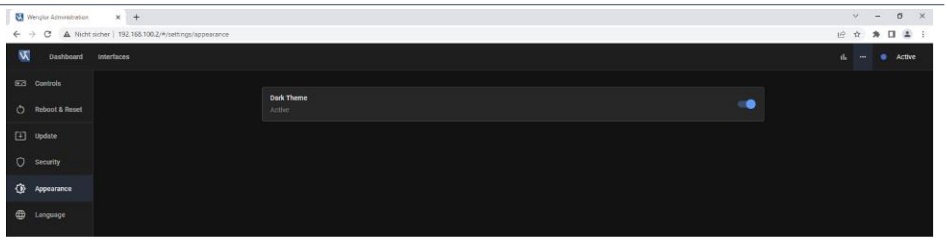
Bright theme	

- **Language: The** “Language” page navigation option defines the user language of the device’s website (DE, EN, FR, IT, ES, PT, NL, HU, TR, ZH, RU). By default, the website is set to English.

9.6 Device Status

The device status indicates the following states:

- Blue: “Active” (Running)
- Flashing blue: Localization (enables/disables localization via the device button; see the section “ Device Button [▶ 29] ”)
- Yellow: Warning (e.g., high CPU usage, high RAM usage, high temperature, high data buffer, or high LAN Ethernet traffic. Typically, a warning is sent if CPU, RAM, or LAN Ethernet usage exceeds 90% for more than 3 seconds)
- Red: Error (e.g., a software service has crashed)

9.7 Log In and Log Out

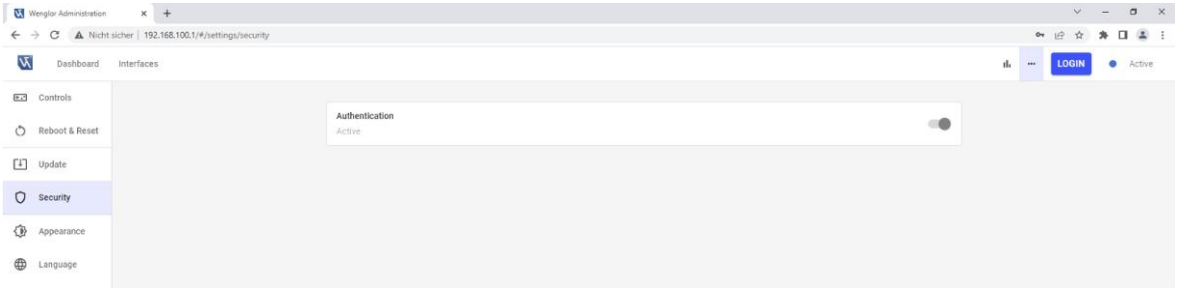

When authentication is enabled, the device is protected against unauthorized changes. You must log in before making any changes (by clicking the “LOGIN” button in the upper-right corner of the device’s website).

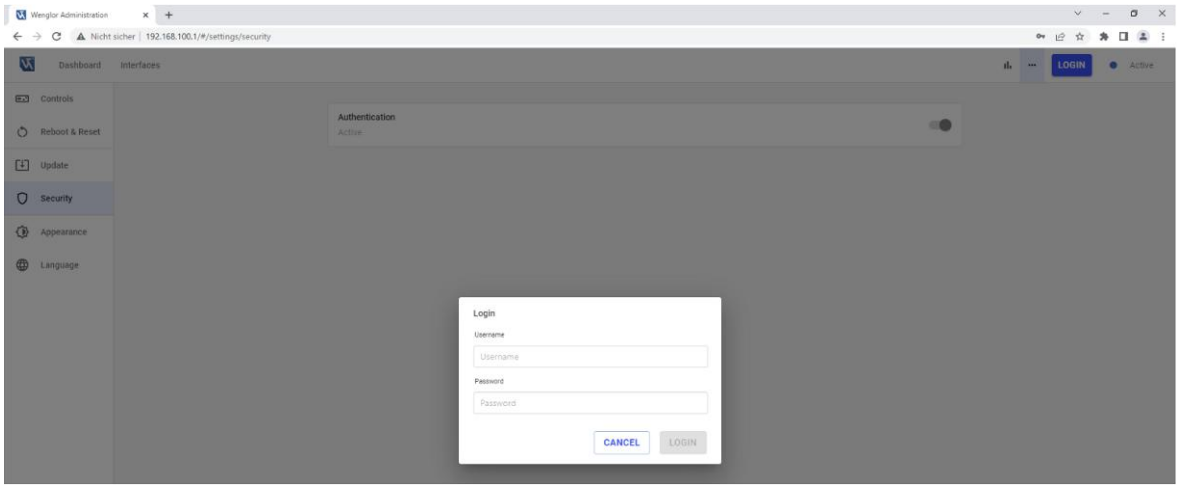

Use “admin” (default) to log in for the first time

- Username: admin
- Password: admin

NOTICE

You can edit the username and password for “admin” (default), but you cannot delete the account or change the user group. Change the password for “admin” (default) to prevent unauthorized access to the device.

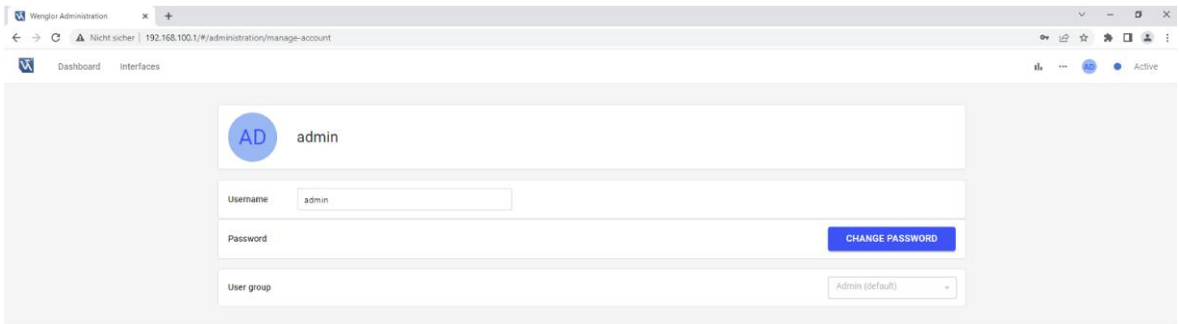

NOTICE

Admins and “Admin” (default) can create new accounts, edit other accounts, and delete accounts. Setters and Workers can only change their own username or password.

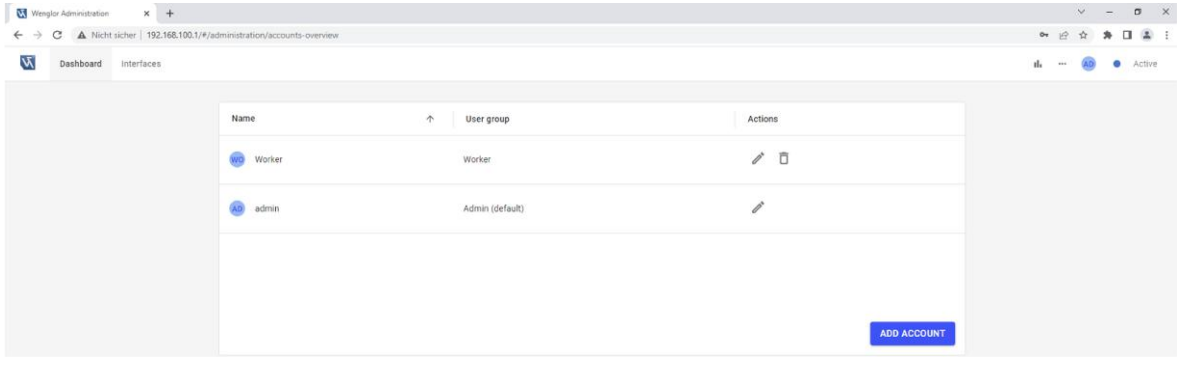

The following table shows the permissions for the various user groups:

Functionality	Admin or admin (default)	Setter	Worker	Logged out
wenglor weHub software (search for devices, open the advanced device view, and access the device website)	Yes	Yes	Yes	Yes
wenglor weHub software (start/stop localization, edit names and network settings)	Yes	No	No	No
Device webpage: View properties	Yes	Yes	Yes	Yes
Device webpage: Edit properties	Yes	No	No	No

NOTICE

1. Please make sure to remember your usernames and passwords!
2. If you forget your password, please contact support@wenglor.com.

9.8 Help Button

Clicking the Help button (question mark in the lower right corner) opens a menu with access to

- Downloads: Opens a new tab in the browser with the device's product details page, which lists all available downloads on the wenglor website (available only with an active internet connection).
- Third-Party Licenses: Opens a new tab in the browser to access third-party licenses for the device (no internet access required).

NOTICE

Licenses for third-party software are also available on the wenglor website: https://www.wenglor.com/License/s/License

- Operating Instructions: Opens the 3D sensor's operating instructions in a new browser tab.
- Release Notes: Opens the release notes for the 3D sensor in a new browser tab, which lists the changes between the different firmware versions.

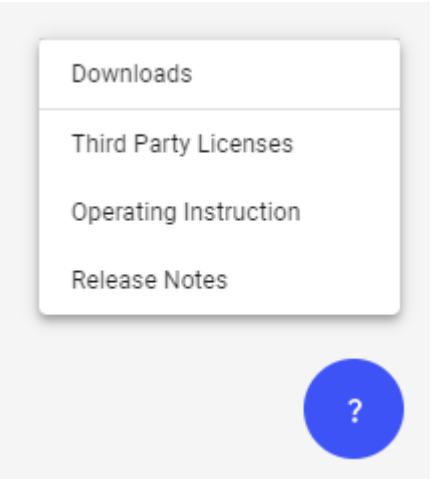

10 Maintenance Instructions



NOTICE

This wenglor product is maintenance-free.

Cleaning and inspection of the plug connections at regular intervals are advisable.

Do not clean the product with solvents or cleaning agents that could damage the product.

The product must be protected against contamination during initial start-up.

11 Proper Disposal

wenglor sensoric GmbH does not accept the return of unusable or irreparable products. Respectively valid national waste disposal regulations apply to product disposal.

12 Declarations of Conformity

Declarations of conformity can be found on our website at www.wenglor.com in the product’s separate download area.

You can find the declarations of conformity on our website at www.wenglor.com in the product's download section.