# M3DS112

Part Number

- **5 MP resolution**
- **Easy integration via SDK or GenICam**
- **High point cloud quality**
- **Integrated 3D point cloud calculation on the unit**

M3DS1xx 3D sensors are distinguished by high precision for minimal measuring volumes. The model variants of the M3DS1xx series are available in two performance classes with camera resolutions of 5 or 12 megapixels. The robust design makes the M3DS1xx sensors suitable for use in industrial environments. With its fast Ethernet interface and three different measuring ranges in each performance class, the M3DS1xx impresses in terms of diversity and speed.

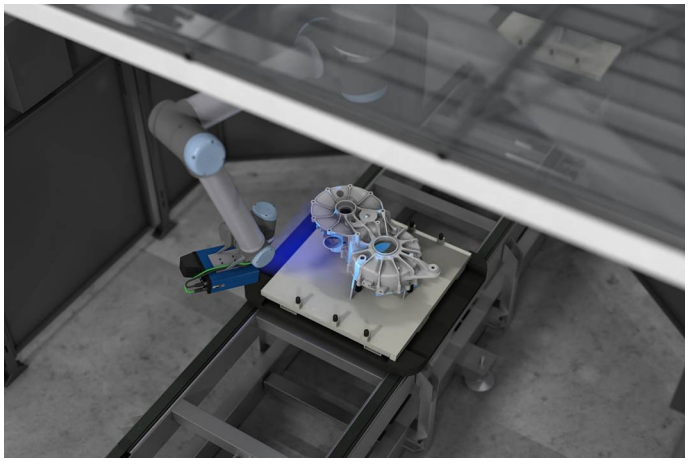

## Technical Data

| | |
|---|---|
| **Optical Data** | |
| Working range Z | 300...350 mm |
| Measuring range Z | 50 mm |
| Measuring range x1/y1 | 70 × 50 mm |
| Measuring range x2/y2 | 80 × 60 mm |
| Resolution Z | 0,003...0,0056 mm |
| Resolution x1/y1 | 0,03 × 0,03 mm |
| Resolution x2/y2 | 0,035 × 0,035 mm |
| Camera Resolution | 5 MP |
| Number of pixels | 2448 × 2048 Pixel |
| Light Source | LED, blue |
| Wavelength | 457 nm |
| Service Life (T = +25 °C) | 20000 h |
| Risk Group (EN 62471) | 2 |
| **Environmental conditions** | |
| Temperature Range | 0...40 °C |
| Storage temperature | -5...70 °C |
| Max. Ambient Light | 5000 Lux |
| EMC | DIN EN 61000-6-2; 61000-6-4 |
| Atmospheric humidity | 5...95%, non-condensing |
| **Electrical Data** | |
| Supply Voltage | 18...30 V DC |
| Max. Current Consumption (Ub = 24 V) | 3,5 A |
| Acquisition time | 0,22...0,5 s |
| Inputs/Outputs | 4 |
| Short Circuit Protection | yes |
| Reverse Polarity Protection | yes |
| Interface | Ethernet TCP/IP |
| Transmission rate | 1...10 Gbit/s |
| Protection Class | III |
| **Mechanical Data** | |
| Setting Method | Web server |
| Housing Material | Aluminum, anodised |
| Housing Material | Plastic, PA6 |
| Degree of Protection | IP67 |
| Connection | M12 × 1; 12-pin |
| Type of Connection Ethernet | M12 × 1; 8-pin, X-cod. |
| Optic Cover | Plastic, PMMA |
| **Safety-relevant Data** | |
| MTTFd (EN ISO 13849-1) | 71,35 a |
| | 1 × initial start-up instructions |
| | 1 × sensor |
| Connection Diagram No. | 251, 1022 |
| Suitable Connection Equipment No. | 50, 87 |
| Suitable Mounting Technology No. | 343 |

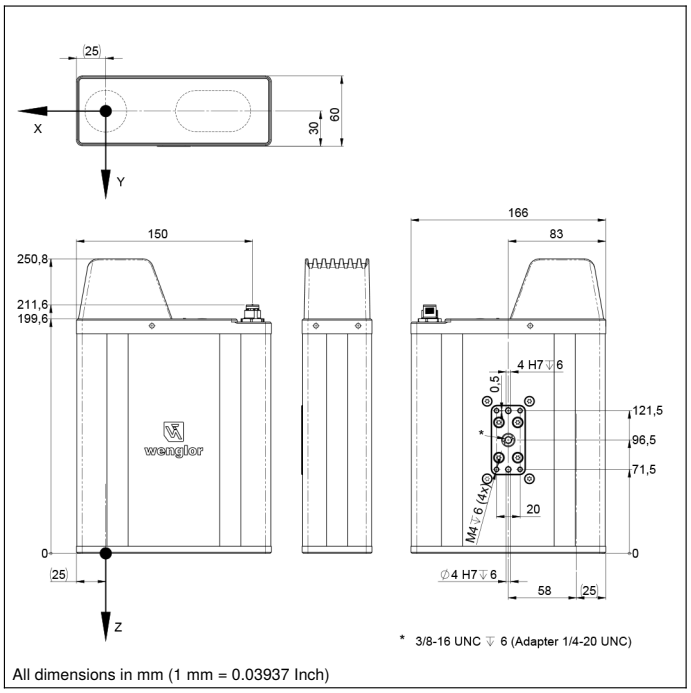


All dimensions in mm (1 mm = 0.03937 Inch)

## Ctrl. Panel

A22

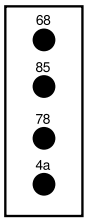


4a = User LED
68 = Power LED
78 = Module status
85 = Link/Act LED

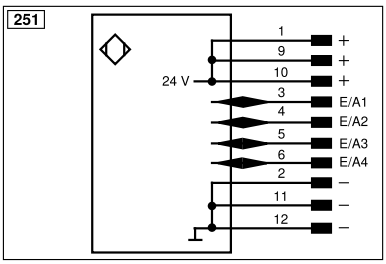


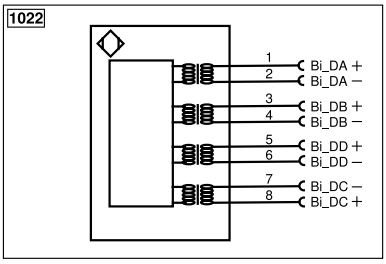


| Legend | | | | | |
|---|---|---|---|---|---|
| + | Supply Voltage + | PT | Platinum measuring resistor | ENARS422 | Encoder A/Ā (TTL) |
| – | Supply Voltage 0 V | nc | Not connected | ENBRS422 | Encoder B/B̄ (TTL) |
| ~ | Supply Voltage (AC Voltage) | U | Test Input | ENA | Encoder A |
| A | Switching Output (NO) | Ū | Test Input inverted | ENB | Encoder B |
| Ā | Switching Output (NC) | W | Trigger Input | AMIN | Digital output MIN |
| V | Contamination/Error Output (NO) | W– | Ground for the Trigger Input | AMAX | Digital output MAX |
| V̄ | Contamination/Error Output (NC) | O | Analog Output | AOK | Digital output OK |
| E | Input (analog or digital) | O– | Ground for the Analog Output | SY In | Synchronization In |
| T | Teach Input | BZ | Block Discharge | SY OUT | Synchronization OUT |
| R | Reset input | AMV | Valve Output | OLT | Brightness output |
| Z | Time Delay (activation) | a | Valve Control Output + | M | Maintenance |
| S | Shielding | b | Valve Control Output 0 V | rsv | Reserved |
| RxD | Interface Receive Path | SY | Synchronization | Wire Colors according to DIN IEC 60757 | |
| TxD | Interface Send Path | SY– | Ground for the Synchronization | BK | Black |
| RDY | Ready | E+ | Receiver-Line | BN | Brown |
| GND | Ground | S+ | Emitter-Line | RD | Red |
| CL | Clock | ⏚ | Grounding | OG | Orange |
| E/A | Output/Input programmable | SnR | Switching Distance Reduction | YE | Yellow |
| | IO-Link | Rx+/– | Ethernet Receive Path | GN | Green |
| PoE | ower over Ethernet | Tx+/– | Ethernet Send Path | BU | Blue |
| IN | Safety Input | Bus | Interfaces-Bus A(+)/B(–) | VT | Violet |
| OSSD | Safety Output | La | Emitted Light disengageable | GY | Grey |
| Signal | Signal Output | Mag | Magnet activation | WH | White |
| BI_D+/– | Ethernet Gigabit bidirect. data line (A-D) | RES | Input confirmation | PK | Pink |
| EN0 RS422 | Encoder 0-pulse 0/0̄ (TTL) | EDM | Contactor Monitoring | GNYE | Green/Yellow |

Specifications are subject to change without notice V0-23.11.2026