wenglor
the innovative family

Operating Instructions

I1QH111

Inductive Sensor with Increased Switching Distance

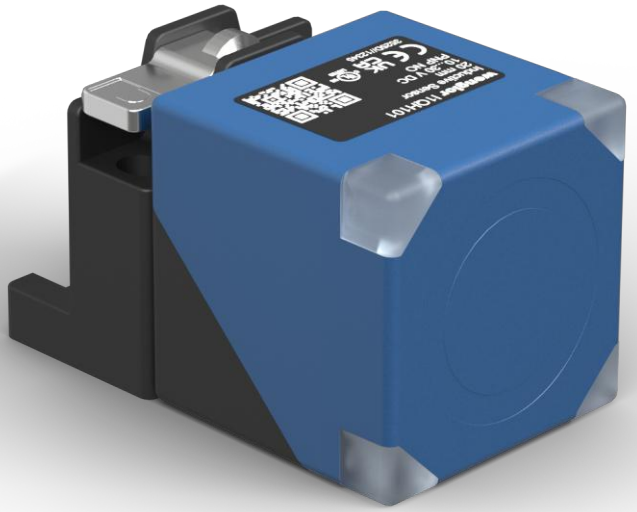

EN

Translation of the original operating instructions
Subject to change without notice
Available as PDF file only
Version 1.0
www.wenglor.com

Table of Contents

1 General 3

1.1 Information Concerning these Instructions 3

1.2 Explanation of Symbols 3

1.3 Limitation of Liability 4

1.4 Copyrights 4

2 For Your Safety 5

2.1 Use for Intended Purpose 5

2.2 Use for Other than the Intended Purpose 5

2.3 Personnel Qualifications 5

2.4 Modification of Products 6

2.5 General Safety Precautions 6

2.6 Approvals and protection classes 6

3 Technical Data 7

3.1 General Information 7

3.2 Housing Dimensions 8

3.3 Complementary Products 8

4 Transport and Storage 9

4.1 Transport 9

4.2 Storage 9

5 Installation and Electrical Connection 10

5.1 Installation 10

5.2 Installation Instructions 10

5.2.1 Switching Distance 11

5.3 Electrical Connection 12

5.4 Diagnosis 12

5.5 Troubleshooting 13

6 Maintenance Instructions 14

7 Proper Disposal 15

8 Declarations of Conformity 16

1 General

1.1 Information Concerning these Instructions

- These instructions ensure the safe and efficient use of the product.
- These instructions are part of the product and must be retained for its entire service life.
- In addition, local accident prevention regulations and national occupational safety regulations must be observed.
- The product is subject to technical improvements, so the instructions and information in these operating instructions may also be subject to change. You can find the current version at www.wenglor.com in the product's download section.



INFORMATION

The operating instructions must be read carefully before use and kept for future reference.

1.2 Explanation of Symbols

- Safety precautions and warnings are emphasized by means of symbols and signal words.
- Safe use of the product is only possible if these safety precautions and warnings are adhered to.

The safety precautions and warnings are laid out in accordance with the following principle:

SIGNAL WORD

Type and source of danger!

Possible consequences in the event that the hazard is disregarded.

→ Measures for averting the hazard.

The meanings of the signal words, as well as the scope of the associated hazards, are listed below:



⚠ DANGER

This signal word indicates a hazard with a high degree of risk which, if not avoided, results in death or severe injury.



⚠ WARNING

This signal word indicates a hazard with a medium degree of risk which, if not avoided, may result in death or severe injury.



⚠ CAUTION

This signal word indicates a hazard with a low degree of risk which, if not avoided, may result in minor or moderate injury.



NOTICE

This signal word draws attention to a potentially hazardous situation which, if not avoided, may result in property damage.

INFORMATION

Information draws attention to useful tips and suggestions, as well as information on efficient, error-free use.

1.3 Limitation of Liability

- The product has been developed in consideration of the current state-of-the-art technology, as well as applicable standards and guidelines. Subject to change without notice.
- A valid declaration of conformity can be accessed at www.wenglor.com in the product's separate download area.
- wenglor sensoric elektronische Geräte GmbH (hereinafter referred to as "wenglor") excludes all liability in the event of:
  - Non-compliance with the instructions
  - Use of the product for purposes other than those intended.
  - Use by untrained personnel.
  - Use of unapproved spare parts.
  - Unapproved modification of products.
- These operating instructions do not include any guarantees from wenglor with regard to the described procedures or specific product characteristics.
- wenglor assumes no liability for printing errors or other inaccuracies contained in these operating instructions unless wenglor was verifiably aware of such errors at the point in time at which the operating instructions were prepared.

1.4 Copyrights

- The contents of these instructions are protected by copyright law.
- All rights are reserved by wenglor.
- Commercial reproduction or any other commercial use of the provided content and information, in particular graphics and images, is not permitted without previous written consent from wenglor.

2 For Your Safety

2.1 Use for Intended Purpose

Inductive Sensors with Increased Switching Distance

Inductive sensors are used to detect the position of metallic objects. A coil is located underneath the sensing face of inductive sensors which generates a magnetic field. Approaching metal objects (e.g. steel, aluminum or brass) generate eddy currents within this magnetic field which are measured by the sensor. When the approaching metal object reaches the selected switching distance, the output is switched.

This Product Can Be Used in the Following Industry Sectors:

- Special-purpose mechanical engineering
- Heavy mechanical engineering
- Logistics
- Automotive industry
- Food industry
- Packaging industry
- Pharmaceuticals industry
- Plastics industry
- Woodworking industry
- Consumer goods industry
- Paper industry
- Electronics industry
- Glass industry
- Steel industry
- Aviation industry
- Chemicals industry
- Alternative energies
- Raw materials extraction

2.2 Use for Other than the Intended Purpose

- Not a safety component in accordance with 2006/42/EC (Machinery Directive).
- The product is not suitable for use in potentially explosive atmospheres.
- The product may be used only with accessories supplied or approved by wenglor, or in combination with approved products. A list of approved accessories and combination products can be found at www.wenglor.com on the product detail page.



⚠ DANGER

Risk of personal injury or property damage in case of use for other than the intended purpose!

Use for other than the intended purpose may lead to hazardous situations.

→ Observe instructions regarding use for intended purpose.

2.3 Personnel Qualifications

- Suitable technical training is a prerequisite.
- In-house electronics training is required.
- Trained personnel who use the product must have (permanent) access to the operating instructions.

⚠ DANGER

Risk of personal injury or property damage in case of incorrect initial start-up and maintenance!

Personal injury and damage to equipment may occur.

→ Adequate training and qualification of personnel

2.4 Modification of Products

⚠ DANGER

Risk of personal injury or property damage if the product is modified!

Personal injury and damage to equipment may occur. Noncompliance may result in loss of the CE and/or UKCA mark and voiding of the warranty.

→ Modification of the product is not permitted

2.5 General Safety Precautions

INFORMATION

These instructions are an integral part of the product and must be kept on hand for the entire duration of its service life.

In the event of possible changes, the current version of the operating instructions can be found at www.wenglor.com in the product's separate download area.

Read the operating instructions carefully before using the product.

Protect the sensor against contamination and mechanical influences.

2.6 Approvals and protection classes

3 Technical Data

3.1 General Information

Inductive Data	
Switching Distance	20 mm
Correction Factors Stainless Steel V2A/CuZn/Al	0,84/0,32/0,30
Mounting	Flush
Installation A/B/C in mm	0/0/60
Installation D in mm	6...35 or ≥ 40
Installation E in mm	30
Switching Hysteresis	< 10 %
Electrical Data	
Supply Voltage	10...30 V DC
Current Consumption (Ub = 24 V)	< 13 mA
Switching Frequency	470 Hz
Temperature Drift	< 10 %
Temperature Range	-40...80 °C
Switching Output Voltage Drop	< 1 V
Switching Output/Switching Current	150 mA
Residual Current Switching Output	< 100 µA
Short Circuit Protection	yes
Reverse Polarity Protection	yes
Overload Protection	yes
Protection Class	III
Mechanical Data	
Housing Material	Plastic, PA
Sensing face	Plastic, PA
Degree of Protection	IP67 IP68
Connection Type	Plug variant
Connection	M12 × 1; 4-pin
Safety-relevant Data	
MTTFd (EN ISO 13849-1)	3706.54 a
General Data	
Scope of delivery	1 × sensor
Packaging unit	1 Piece
BMECat data	
eCl@ss 5.1.4	27-27-01-01 Inductive proximity switch
eCl@ss 6.x	27-27-01-01 Inductive proximity switch
eCl@ss 7.0	27-27-01-01 Inductive proximity switch
eCl@ss 7.1	27-27-01-01 Inductive proximity switch
eCl@ss 8.x	27-27-01-01 Inductive proximity switch
eCl@ss 10.0.1	27-27-01-01 Inductive proximity switch

3.2 Housing Dimensions

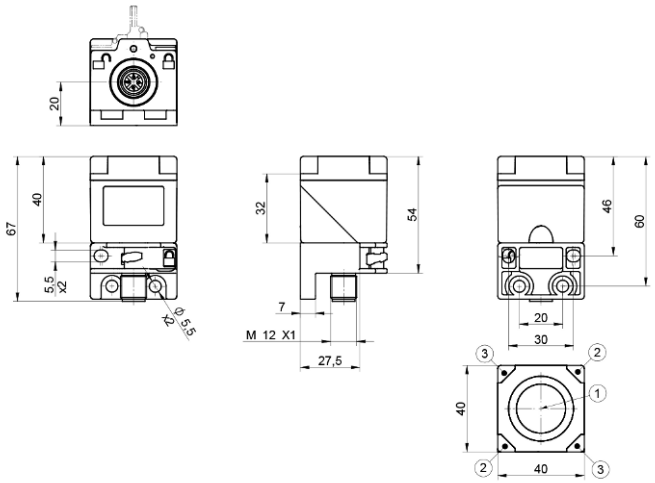

Symbol	Legend
1	Active surface
2	Power LED
3	switching status indicator

Dimensions in mm (1 mm = 0.03937 inch)

3.3 Complementary Products

wenglor offers you the right connection and mounting technology as well as other accessories for your product. You can find this at www.wenglor.com on the product details page at the bottom.

4 Transport and Storage

4.1 Transport

Upon receipt of shipment, the goods must be inspected for damage in transit. In the case of damage, conditionally accept the package and notify the manufacturer of the damage. Then return the device, making reference to damage in transit.

4.2 Storage

The following points must be taken into consideration with regard to storage:

- Do not store the product outdoors.
- Store the product in a dry, dust-free place.
- Protect the product against mechanical impacts.
- Protect the product against exposure to direct sunlight.



NOTICE

Risk of property damage in case of improper storage!

The product may be damaged.

→ Storage instructions must be complied with.

5 Installation and Electrical Connection

5.1 Installation

- Protect the product from contamination during installation.
- Observe all applicable electrical and mechanical regulations, standards, and safety rules.
- Protect the product against mechanical influences.
- Make sure that the sensor is mounted in a mechanically secure fashion.
- Specified torque values must be complied with (see section Technical Data [▶ 7]).
- The active surface of the sensor may not contact any other machine parts.
- The sensor's active surface can be mounted in five different orientations. To do this, loosen the holder's clamp and remove the sensor from the holder. Align the sensor in the desired position and reinsert it into the holder. Then tighten the clamp to securely fasten the sensor in the selected position.
- Installation instructions must be observed (see Technical Data [▶ 7] section).

NOTICE

Risk of property damage in case of improper installation!

The product may be damaged!

→ Comply with installation instructions.

⚠ CAUTION

Risk of personal injury or property damage during installation!

Personal injury and damage to the product may occur.

→ Ensure a safe installation environment.

5.2 Installation Instructions

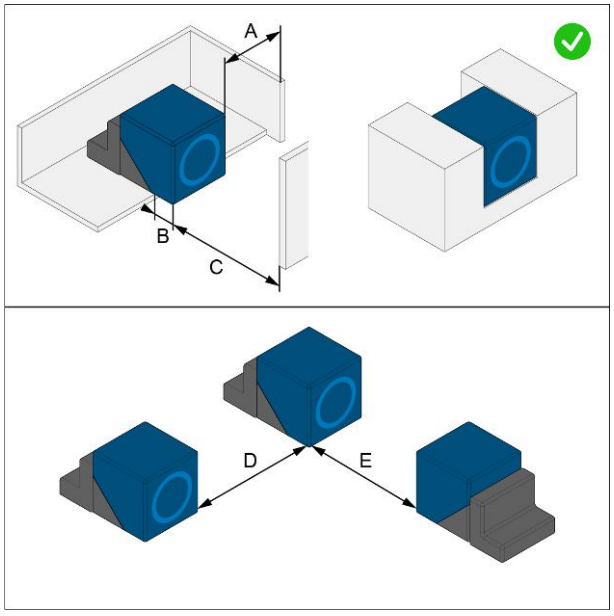

	I1QH111
Installation A/B/C in mm	0/0/60
Installation D in mm	6...35 or ≥ 40
Installation E in mm	30

Installation Dimensions	Description
A	Minimum distance from the sensor to the damping material (e.g., steel).
B	Minimum distance by which the sensor (active surface) must protrude from the damping material (e.g., steel).
C	Minimum distance between the active surface of the inductive sensor and the damping material (e.g., steel). The distance C refers not to the object to be detected, but to the background. The object to be detected is detected within the switching distance.
D	Minimum distance between two inductive sensors. This distance applies to installation in air. If the sensors are installed in an attenuating material (e.g., steel), the distance is reduced. The exact distance must be tested in the application.
E	Opposite-side mounting. Two sensors of the same design must be mounted at this minimum distance.

5.2.1 Switching Distance

- The switching distance described in the technical data [▶ 7] is the nominal switching distance Sn according to the standard.
- The switching distance refers to a standard measuring plate (material: steel, thickness: 1 mm, side lengths: 3× Sn or outside diameter sensor).
- The switching distance according to the standard is further differentiated into:
  - Effective switching distance S_r
  - Useable switching distance S_u
  - Working distance S_a

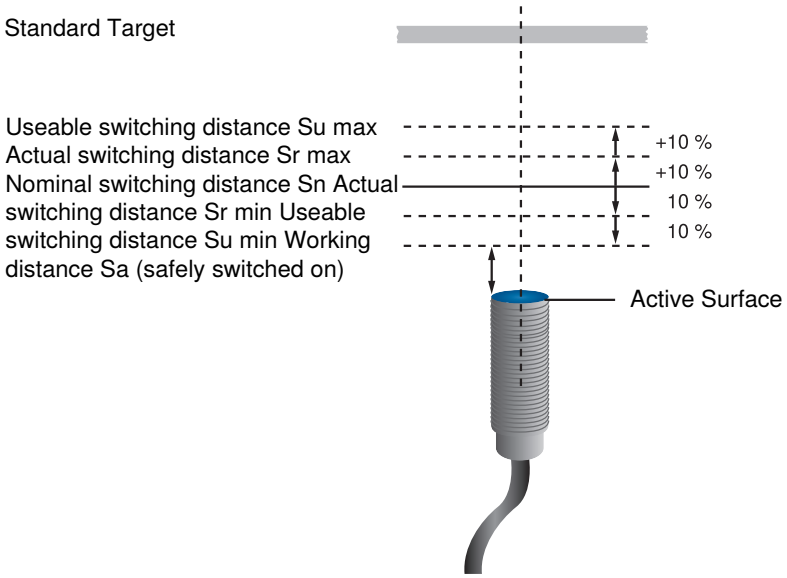

NOTICE

If the objects in the application are smaller than the standard measuring plate, the

switching distance is also reduced.

The correction factor of the sensor for certain materials also influences the switching distance and must be observed.

The sensor should be mounted at a working distance Sa or less to the object.

5.3 Electrical Connection

- Wire the sensor according to the connection diagram.
- Switch on the supply voltage (see section Technical Data [▶ 7]).

⚠ DANGER

Risk of personal injury or property damage due to electric current.

Live parts may cause damage to persons and equipment.

→ The electrical device may only be connected by qualified personnel.

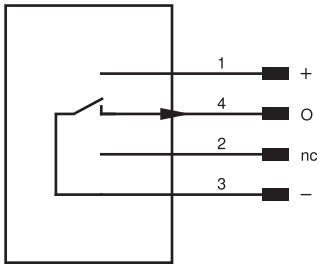

pin	Pin Function	Polarity	Circuit
1	Supply Voltage +		
2	Not connected		
3	Supply voltage 0 V		
4	switching output	NPN	NO

5.4 Diagnosis

Indicator	Condition	Meaning
Power LED	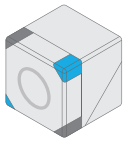	Sensor ready for operation
	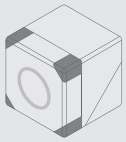	No voltage supply available

Indicator	Condition	Meaning
Switching status indicator		Switching output active
	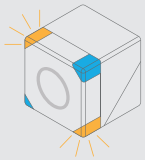	Error
	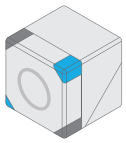	Switching output not active

Not lit

/ Solid light

Flashes (5 Hz)

5.5 Troubleshooting

Error

Possible Cause	Solution
Short circuit	Check the wiring and clear the short circuit
Mechanical damage to the coil	Replace the sensor

INFORMATION

Action in case of a fault:

1. Take the machine out of service.
2. Analyze the cause of the error using the diagnostic information and correct it.
3. If the error cannot be resolved, contact wenglor Support.
4. Do not operate the machine if the fault behavior is unclear.
5. The machine must be taken out of service if the error cannot be clearly identified or safely resolved.

⚠ DANGER

Risk of personal injury or property damage if not observed!

The system's safety function is disabled. Risk of injury to personnel and damage to equipment.

→ Follow the specified procedure in the event of an error.

6 Maintenance Instructions



NOTICE

This wenglor product is maintenance-free.

Cleaning and inspection of the plug connections at regular intervals are advisable.

Do not clean the product with solvents or cleaning agents that could damage the product.

The product must be protected against contamination during initial start-up.

7 Proper Disposal

wenglor sensoric GmbH does not accept the return of unusable or irreparable products. Respectively valid national waste disposal regulations apply to product disposal.

8 Declarations of Conformity

Declarations of conformity can be found on our website at www.wenglor.com in the product's separate download area.