wenglor
the innovative family

Technical Data

I1QH102

Inductive Sensor

with Increased Switching Distance

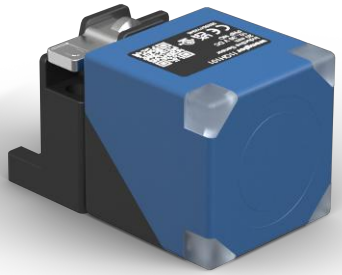

Symbol	Key
1	Active surface
2	Power LED
3	Switching status indicator O1

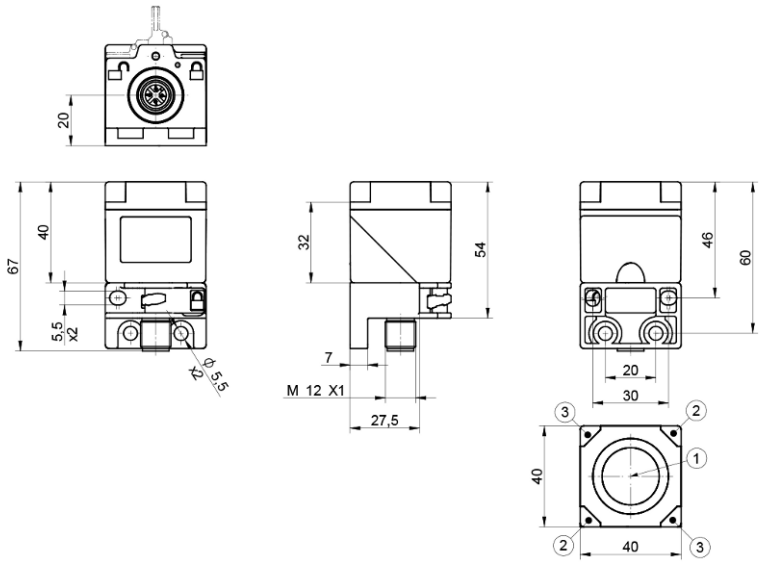

EN

Dimensions in mm
Subject to change without notice
Version 0
www.wenglor.com

Technical data

Inductive Data	
Switching Distance	20 mm
Correction Factors Stainless Steel V2A/CuZn/Al	0,84/0,32/0,30
Mounting	Flush
Installation A/B/C in mm	0/0/60
Installation D in mm	6...35 or ≥ 40
Installation E in mm	30
Switching Hysteresis	< 10 %

Electrical Data	
Supply Voltage	10...30 V DC
Current Consumption (Ub = 24 V)	< 13 mA
Switching Frequency	470 Hz
Temperature Drift	< 10 %
Temperature Range	-40...80 °C
Switching Output Voltage Drop	< 1 V
Switching Output/Switching Current	150 mA
Residual Current Switching Output	< 100 µA
Short Circuit Protection	yes
Reverse Polarity Protection	yes
Overload Protection	yes
Protection Class	III

Mechanical Data	
Housing Material	Plastic, PA
Sensing face	Plastic, PA
Degree of Protection	IP67 IP68
Connection Type	Plug variant
Connection	M12 × 1; 4-pin

Safety-relevant Data	
MTTFd (EN ISO 13849-1)	3706.54 a

General Data	
Scope of delivery	1 × sensor
Packaging unit	1 Piece

BMECat data	
eCl@ss 5.1.4	27-27-01-01 Inductive proximity switch
eCl@ss 6.x	27-27-01-01 Inductive proximity switch
eCl@ss 7.0	27-27-01-01 Inductive proximity switch
eCl@ss 7.1	27-27-01-01 Inductive proximity switch
eCl@ss 8.x	27-27-01-01 Inductive proximity switch

BMECat data	
eCl@ss 10.0.1	27-27-01-01 Inductive proximity switch

Technical illustrations

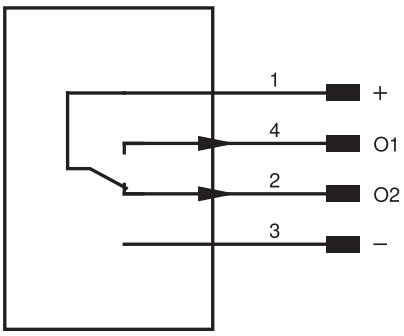

Pin	Pin function	Polarity	Circuit
1	Supply Voltage +		
2	Switching Output 2	PNP	Antivalent
3	Supply voltage 0 V		
4	Switching Output 1	PNP	NO

Illustration 1: Mounting

