1D/2D Handheld Scanner

CSMH011

Part Number



- **Direct feedback after decoding (vibration, visual/acoustic signal)**
- **Quick alignment and capture of 1D/2D codes**
- **Resistant to cleaning agents**

Technical Data

Optical Data	
Read Range	5...328 mm
Resolution	1280 × 960 Pixel
Light Source	Red Light
Max. Ambient Light	97000 Lux
Barcode Printing Contrast	> 15 %
Environmental conditions	
Temperature Range	-20...55 °C
Electrical Data	
Supply Voltage	5 V DC
Current Consumption (Ub = 5V)	< 350 mA
Interface	USB/RS-232
Acoustic signal	yes
Vibration signal	yes
Visual signal	yes
Mechanical Data	
Housing Material	Plastic, PC
Degree of Protection	IP54
Connection	Prewired
Cable Length	1,8 m
Shock Resistance	> 50 *
USB Interface	●
RS-232 Interface	●
Suitable Mounting Technology No.	431

* Falls from 1.8 m height onto concrete

These wenglor handheld scanners are suitable for the mobile scanning of 1D and 2D codes on a wide variety of different materials. Good scanning results are even obtained with poor code quality. Readable code types: DataMatrix, Data Matrix Rectangle Extension, QR Code, Micro QR Code, QR Model 1, Aztec Code, PDF417, Composite, Grid Matrix, Maxicode, Micro PDF417, PDF417, Code 11, Code 32, Code39, Code 49, Code128, Interleaved 2 of 5, Telepen, MSI Plessey, Plessey, Pharmacode, UPC/EAN/JAN, Codabar, Codablock F, GS1 Databar, GS1 Composite, Planet, Code93, BC412, Postal Codes, Trioptic.

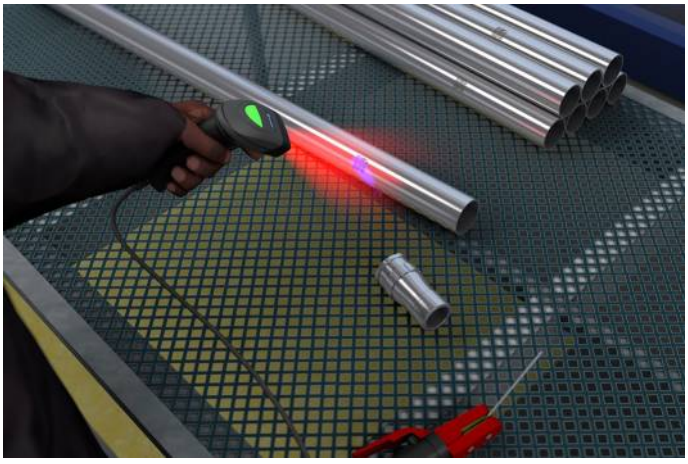

Complementary Products

Interface Cable ZDNV001
Interface Cable ZDNV002
Interface cable ZDNV007
Software DNNF018

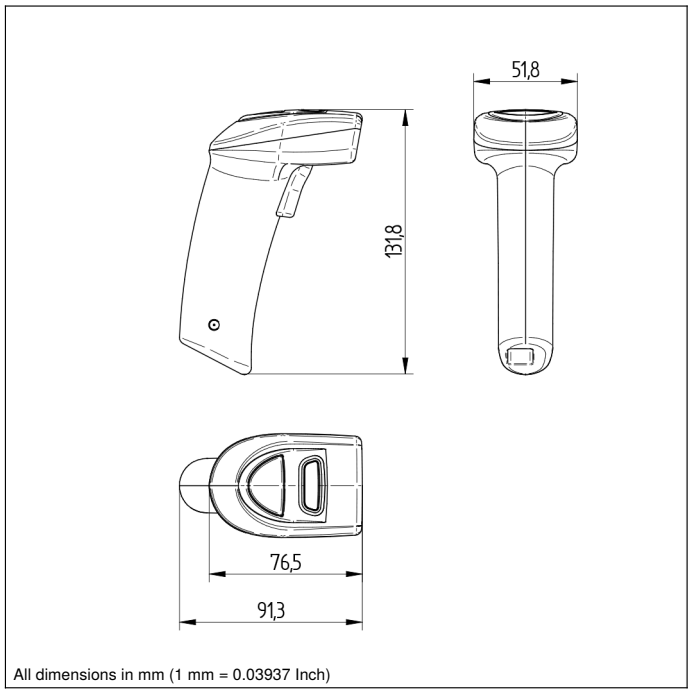

All dimensions in mm (1 mm = 0.03937 Inch)

Min. Resolution		Read Range 1D	Read Range 2D
1D	2D		
0,076 mm	0,127 mm	85 to 107 mm	28 to 100 mm
0,19 mm	0,16 mm	18 to 167 mm	18 to 135 mm
0,267 mm	0,254 mm	5 to 205 mm	5 to 165 mm
0,33 mm	0,528 mm	13 to 265 mm	13 to 328 mm

Specifications are subject to change without notice V1-25.02.2025