wenglor
the innovative family

Operating Instructions

P2KL002
Retro-Reflex Sensor Universal



EN

Translation of the original operating instructions
Subject to change without notice
Available as PDF file only
Version 2.1
www.wenglor.com

Table of Contents

1 General 3

1.1 Information Concerning these Instructions 3

1.2 Explanation of Symbols 3

1.3 Limitation of Liability 4

1.4 Copyrights 4

2 For Your Safety 5

2.1 Use for Intended Purpose 5

2.2 Use for Other than the Intended Purpose 5

2.3 Personnel Qualifications 5

2.4 Modification of Products 6

2.5 General Safety Precautions 6

2.6 Approvals and protection classes 6

3 Technical Data 7

3.1 General information 7

3.1.1 Light spot diameter 8

3.1.2 Smallest detectable part 8

3.1.3 Switching Distance 8

3.2 Housing Dimensions 9

3.3 Control panel 9

3.4 Complementary Products 10

3.5 Scope of delivery 10

4 Transport and Storage 11

4.1 Transport 11

4.2 Storage 11

5 Installation and Electrical Connection 12

5.1 Installation 12

5.2 Electrical Connection 12

5.3 Diagnosis 13

6 Settings 15

6.1 Adjustment via Potentiometer 15

6.2 Setting via IO-Link and wTeach2 15

7 Maintenance Instructions 16

8 Proper Disposal 17

9 Declarations of Conformity 18

1 General

1.1 Information Concerning these Instructions

- These instructions ensure the safe and efficient use of the product.
- These instructions are part of the product and must be retained for its entire service life.
- In addition, local accident prevention regulations and national occupational safety regulations must be observed.
- The product is subject to technical improvements, so the instructions and information in these operating instructions may also be subject to change. You can find the current version at www.wenglor.com in the product's download section.



INFORMATION

The operating instructions must be read carefully before use and kept for future reference.

1.2 Explanation of Symbols

- Safety precautions and warnings are emphasized by means of symbols and signal words.
- Safe use of the product is only possible if these safety precautions and warnings are adhered to.

The safety precautions and warnings are laid out in accordance with the following principle:

SIGNAL WORD

Type and source of danger!

Possible consequences in the event that the hazard is disregarded.

→ Measures for averting the hazard.

The meanings of the signal words, as well as the scope of the associated hazards, are listed below:



⚠ DANGER

This signal word indicates a hazard with a high degree of risk which, if not avoided, results in death or severe injury.



⚠ WARNING

This signal word indicates a hazard with a medium degree of risk which, if not avoided, may result in death or severe injury.



⚠ CAUTION

This signal word indicates a hazard with a low degree of risk which, if not avoided, may result in minor or moderate injury.



NOTICE

This signal word draws attention to a potentially hazardous situation which, if not avoided, may result in property damage.



INFORMATION

Information draws attention to useful tips and suggestions, as well as information on efficient, error-free use.

1.3 Limitation of Liability

- The product has been developed in consideration of the current state-of-the-art technology, as well as applicable standards and guidelines. Subject to change without notice.
- A valid declaration of conformity can be accessed at www.wenglor.com in the product's separate download area.
- wenglor sensoric elektronische Geräte GmbH (hereinafter referred to as "wenglor") excludes all liability in the event of:
  - Non-compliance with the instructions
  - Use of the product for purposes other than those intended.
  - Use by untrained personnel.
  - Use of unapproved spare parts.
  - Unapproved modification of products.
- These operating instructions do not include any guarantees from wenglor with regard to the described procedures or specific product characteristics.
- wenglor assumes no liability for printing errors or other inaccuracies contained in these operating instructions unless wenglor was verifiably aware of such errors at the point in time at which the operating instructions were prepared.

1.4 Copyrights

- The contents of these instructions are protected by copyright law.
- All rights are reserved by wenglor.
- Commercial reproduction or any other commercial use of the provided content and information, in particular graphics and images, is not permitted without previous written consent from wenglor.

2 For Your Safety

2.1 Use for Intended Purpose

Retro-Reflex Sensors

In the case of retro-reflex sensors, the emitter and the receiver are located in one housing. They work with red or laser light and a reflector. If the light beam between the sensor and the reflector is interrupted, the output is switched. Even shiny objects such as mirrors, chrome plated or other reflective surfaces can be reliably recognized thanks to the integrated polarization filter.

This Product Can Be Used in the Following Industry Sectors:

- Special-purpose mechanical engineering
- Heavy mechanical engineering
- Logistics
- Automotive industry
- Food industry
- Packaging industry
- Pharmaceuticals industry
- Plastics industry
- Woodworking industry
- Consumer goods industry
- Paper industry
- Electronics industry
- Glass industry
- Steel industry
- Aviation industry
- Chemicals industry
- Alternative energies
- Raw materials extraction

2.2 Use for Other than the Intended Purpose

- Not a safety component in accordance with 2006/42/EC (Machinery Directive).
- The product is not suitable for use in potentially explosive atmospheres.
- The product may be used only with accessories supplied or approved by wenglor, or in combination with approved products. A list of approved accessories and combination products can be found at www.wenglor.com on the product detail page.



⚠ DANGER

Risk of personal injury or property damage in case of use for other than the intended purpose!

Use for other than the intended purpose may lead to hazardous situations.

→ Observe instructions regarding use for intended purpose.

2.3 Personnel Qualifications

- Suitable technical training is a prerequisite.
- In-house electronics training is required.
- Trained personnel who use the product must have (permanent) access to the operating instructions.

⚠ DANGER

Risk of personal injury or property damage in case of incorrect initial start-up and maintenance!

Personal injury and damage to equipment may occur.

→ Adequate training and qualification of personnel

2.4 Modification of Products

⚠ DANGER

Risk of personal injury or property damage if the product is modified!

Personal injury and damage to equipment may occur. Noncompliance may result in loss of the CE and/or UKCA mark and voiding of the warranty.

→ Modification of the product is not permitted

2.5 General Safety Precautions

INFORMATION

These instructions are an integral part of the product and must be kept on hand for the entire duration of its service life.

In the event of possible changes, the current version of the operating instructions can be found at www.wenglor.com in the product's separate download area.

Read the operating instructions carefully before using the product.

Protect the sensor against contamination and mechanical influences.

2.6 Approvals and protection classes

3 Technical Data

3.1 General information

	P2KL002
Optical data	
Range	5000 mm
Reference Reflector/Reflector Foil	RQ100BA
Switching Hysteresis	< 10 %
Light Source	LED, red
Polarization Filter	yes
Service Life (T = +25 °C)	100000 h
Max. Ambient Light	10000 Lux
Two-Lens Optic	
Electrical data	
Supply Voltage	10...30 V DC
Supply Voltage with IO-Link	18...30 V DC
Current Consumption (Ub = 24 V)	< 20 mA
Switching Frequency	2000 Hz
Switching frequency (speed mode)	3500 Hz
Response Time	0.25 ms
Response time (speed mode)	0.14 ms
Temperature Drift	< 10 %
Temperature Range	-40...60 °C
Switching Output Voltage Drop	< 2 V
Switching Output/Switching Current	100 mA
Residual Current Switching Output	< 50 µA
Short Circuit Protection	yes
Reverse Polarity Protection	yes
Overload Protection	yes
Lockable	yes
Interface	IO-Link V1.1
Protection Class	III
Mechanical data	
Setting Method	Potentiometer
Housing Material	Stainless steel, V4A (1.4404/316L)
Degree of Protection	IP68 IP69K
Connection	M8 × 1; 4-pin
Optic Cover	Plastic, PMMA
Safety technology data	
MTTFd (EN ISO 13849-1)	2756.38 a
Output functions	
Output	PNP
Circuit	NC+NO
Adjustable parameters	
Output	Push-pull NPN PNP

	P2KL002
Circuit	inactive NC NC+NO NO
Other parameters	Off-delay On-delay Mode of operation Hysteresis Switching point Emitted light

3.1.1 Light spot diameter

Working Distance	0,2 m	2 m	5 m
Light Spot Diameter	30 mm	180 mm	400 mm

3.1.2 Smallest detectable part

Distance, Sensor to Reflector	1 m	2,5 m	5 m
Smallest Recognizable Part	10 mm	20 mm	30 mm

3.1.3 Switching Distance

The achievable switching distance depends on the reflector used. The nominal switching distance is achieved with the reference reflector specified in the technical data. Please refer to the following table for the achievable ranges with other reflectors:

	P2KL002
RQ100BA	0.01...5 m
RE18040BA	0.01...4.5 m
RQ84BA	0.01...4.5 m
RR84BA	0.01...4.5 m
RE9538BA	0.01...2 m
RE6151BM	0.01...3.5 m
RR50_A	0.01...3 m
RE6040BA	0.01...3.5 m
RE8222BA	0.01...2.5 m
RR34_M	0.01...1.6 m
RE3220BM	0.01...1.5 m
RE6210BM	0.01...1.5 m
RR25_M	0.01...1.3 m
RR25KP	0.01...0.8 m
RR21_M	0.01...1.1 m
Z90R004	0...1.65 m
Z90R005	0...2.3 m
ZRAE02B01	0.01...2 m
ZRME01B01	0.01...0.9 m
ZRME03B01	0.01...1.6 m
ZRMR02K01	0.01...1 m
ZRMS02_01	0.01...1 m
ZRDF03K01	0.03...3 m
ZRDF10K01	0.03...3.5 m

	P2KL002
RF505	0.02...1.9 m
RF508	0.02...1.7 m
RF258	0.02...1.4 m

3.2 Housing Dimensions

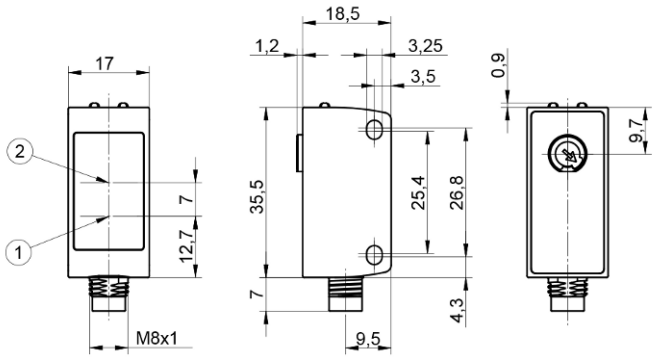

① Transmitter Diode

② Receiver Diode

Screw M3 = 0,5 Nm

M8 × 1 plug without snap lock

Switching distance adjuster = 40 Nmm

Dimensions in mm (1 mm = 0.03937 inch)

3.3 Control panel

1K1

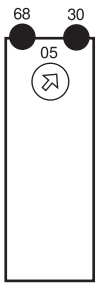

05 = Switching Distance Adjuster
30 = Switching Status/Contamination Warning
68 = Power LED

3.4 Complementary Products

wenglor offers you the right connection and mounting technology as well as other accessories for your product. You can find this at www.wenglor.com on the product details page at the bottom.

3.5 Scope of delivery

- Sensor
- Commissioning instructions

4 Transport and Storage

4.1 Transport

Upon receipt of shipment, the goods must be inspected for damage in transit. In the case of damage, conditionally accept the package and notify the manufacturer of the damage. Then return the device, making reference to damage in transit.

4.2 Storage

The following points must be taken into consideration with regard to storage:

- Do not store the product outdoors.
- Store the product in a dry, dust-free place.
- Protect the product against mechanical impacts.
- Protect the product against exposure to direct sunlight.



NOTICE

Risk of property damage in case of improper storage!

The product may be damaged.

→ Storage instructions must be complied with.

5 Installation and Electrical Connection

5.1 Installation

- Protect the product from contamination during installation.
- Observe the applicable electrical and mechanical regulations, standards, and safety rules.
- Protect the product from mechanical impact.
- Ensure that the sensor is mechanically secure during installation.
- Torque specifications must be observed (see the “Housing Dimensions” [▶ 9] section).

NOTICE

Follow the manufacturer's specifications regarding the required torque for the connection line.

NOTICE

Risk of property damage in case of improper installation!

The product may be damaged!

→ Comply with installation instructions.

⚠ CAUTION

Risk of personal injury or property damage during installation!

Personal injury and damage to the product may occur.

→ Ensure a safe installation environment.

5.2 Electrical Connection

- Wire the sensor according to the connection diagram.
- Switch on the supply voltage (see section Technical Data [▶ 7]).

⚠ DANGER

Risk of personal injury or property damage due to electric current.

Live parts may cause damage to persons and equipment.

→ The electrical device may only be connected by qualified personnel.

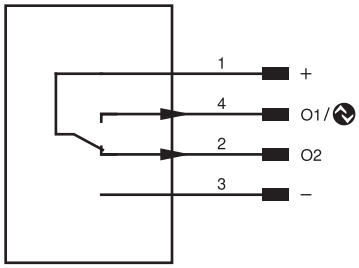

pin	Pin Function	Polarity	Circuit
1	Supply Voltage +		
2	Switching output 2	PNP	antivalent

pin	Pin Function	Polarity	Circuit
3	Supply voltage 0 V		
4	Switching output 1 IO-Link	PNP	NO

5.3 Diagnosis

Causes triggering the contamination warning (flashing LED):

Display LED	Diagnosis/Cause	Elimination
Continuous flashing at approx. 2.5 Hz	Contamination	Carefully clean the optic cover with a cloth
	Aged emitter diode	Replace the sensor
	Unreliable working range	• Increase the sensor's switching distance • Reduce distance between sensor and reflector
Continuous flashing at approx. 5 Hz	Short circuit	Check electrical wiring and eliminate the short circuit
	Over-temperature	Disconnect the sensor from the supply voltage and allow it to cool
	Hardware error	Replace the sensor

Contamination Warning Flowcharts

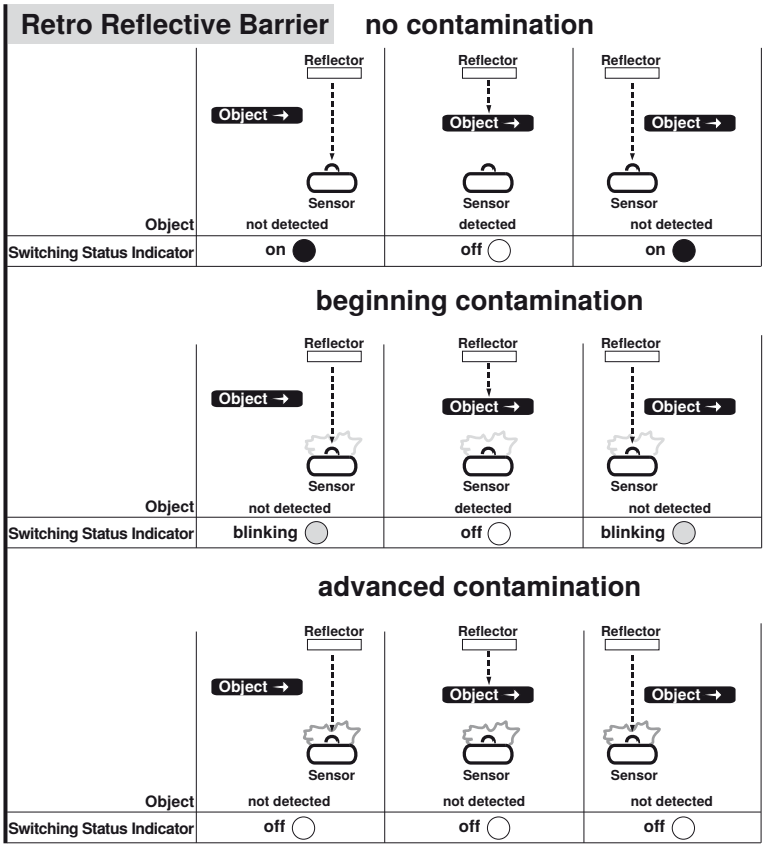

NOTICE

Required action in case of fault:

1. Shut down the machine.
2. Analyze and eliminate the cause of error with the aid of the diagnostics information.
3. If the error cannot be eliminated, please contact wenglor's support department.
4. Do not operate in case of indeterminate malfunctioning.
5. The machine must be shut down if the error cannot be definitively explained or properly eliminated.

⚠ DANGER

Risk of personal injury or property damage in case of non-compliance!

The system's safety function is disabled. Personal injury and damage to equipment may occur.

→ Required action as specified in case of fault.

6 Settings

The sensor can be set via the control, IO-Link and wTeach2. The different setting options are outlined below.

6.1 Adjustment via Potentiometer

- Align sensor to reflector.
- Make sure that the sensor and the reflector are mounted in a mechanically secure fashion.
- Turn the potentiometer all the way to the right.
- Turn the potentiometer back if required (detection of small or transparent objects).
- Move the object into the sensor's working range and check for correct functioning.

6.2 Setting via IO-Link and wTeach2

The sensors can exchange parameters and process data via IO-Link. The parameters can be used to make many additional settings on the device. The process data transmit cyclical data and condition monitoring.

To this end, the sensor is connected to a suitable IO-Link master (see product detail page/complementary products). The interface protocol and the IODD can be found at www.wenglor.com in the download area for the respective product.

For information on installing and connecting the wTeach2 software and its structure, as well as information on the general functions, see the wTeach2 operating instructions. They can be found online in the download area at www.wenglor.com under order number DNNF005.

7 Maintenance Instructions



NOTICE

This wenglor product is maintenance-free.

Cleaning and inspection of the plug connections at regular intervals are advisable.

Do not clean the product with solvents or cleaning agents that could damage the product.

The product must be protected against contamination during initial start-up.

8 Proper Disposal

wenglor sensoric GmbH does not accept the return of unusable or irreparable products. Respectively valid national waste disposal regulations apply to product disposal.

9 Declarations of Conformity

Declarations of conformity can be found on our website at www.wenglor.com in the product's separate download area.