wenglor
the innovative family

Operating Instructions

FXPL005
Fill-level Sensor with IO-Link



EN

Translation of the original operating instructions
Subject to change without notice
Available as PDF file only
Version 1.1
www.wenglor.com

Table of Contents

1 General 3

1.1 Information Concerning these Instructions 3

1.2 Explanation of Symbols 3

1.3 Limitation of Liability 4

1.4 Copyrights 4

2 For Your Safety 5

2.1 Use for Intended Purpose 5

2.2 Use for Other than the Intended Purpose 5

2.3 Personnel Qualifications 5

2.4 Modification of Products 6

2.5 General Safety Precautions 6

2.6 Approvals and protection classes 6

3 Technical Data 7

3.1 General Data 7

3.2 Default Settings 8

3.3 Housing Dimensions 9

3.4 Complementary Products 9

3.5 Layout 9

4 Transport and Storage 10

4.1 Transport 10

4.2 Storage 10

5 Installation and Electrical Connection 11

5.1 Installation 11

5.2 Cleaning 13

5.3 Electrical Connection 13

5.4 Diagnostics 14

6 Settings 16

6.1 Settings via teach-in 16

6.2 Pin function 18

6.3 Window Trigger 18

6.4 Adaptive Trigger 18

7 Maintenance Instructions 20

8 Returns 21

9 Proper Disposal 22

10 Declarations of Conformity 23

1 General

1.1 Information Concerning these Instructions

- These instructions make it possible to use the product safely and efficiently.
- These instructions are an integral part of the product and must be kept on hand for the entire duration of its service life.
- Local accident prevention regulations and national work safety regulations must be complied with as well.
- The product is subject to further technical development, and thus the information contained in these operating instructions may also be subject to change. The current version can be found at www.wenglor.com in the product's separate download area.



INFORMATION

The operating instructions must be read carefully before using the product and must be kept on hand for later reference.

1.2 Explanation of Symbols

- Safety precautions and warnings are emphasized by means of symbols and signal words.
- Safe use of the product is only possible if these safety precautions and warnings are adhered to.

The safety precautions and warnings are laid out in accordance with the following principle:

SIGNAL WORD

Type and source of danger!

Possible consequences in the event that the hazard is disregarded.

→ Measures for averting the hazard.

The meanings of the signal words, as well as the scope of the associated hazards, are listed below:



⚠ DANGER

This signal word indicates a hazard with a high degree of risk which, if not avoided, results in death or severe injury.



⚠ WARNING

This signal word indicates a hazard with a medium degree of risk which, if not avoided, may result in death or severe injury.



⚠ CAUTION

This signal word indicates a hazard with a low degree of risk which, if not avoided, may result in minor or moderate injury.



NOTICE

This signal word draws attention to a potentially hazardous situation which, if not avoided, may result in property damage.

INFORMATION

Information draws attention to useful tips and suggestions, as well as information on efficient, error-free use.

1.3 Limitation of Liability

- The product has been developed in consideration of the current state-of-the-art technology, as well as applicable standards and guidelines. Subject to change without notice.
- A valid declaration of conformity can be accessed at www.wenglor.com in the product's separate download area.
- wenglor sensoric elektronische Geräte GmbH (hereinafter referred to as "wenglor") excludes all liability in the event of:
  - Non-compliance with the instructions
  - Use of the product for purposes other than those intended.
  - Use by untrained personnel.
  - Use of unapproved spare parts.
  - Unapproved modification of products.
- These operating instructions do not include any guarantees from wenglor with regard to the described procedures or specific product characteristics.
- wenglor assumes no liability for printing errors or other inaccuracies contained in these operating instructions unless wenglor was verifiably aware of such errors at the point in time at which the operating instructions were prepared.

1.4 Copyrights

- The contents of these instructions are protected by copyright law.
- All rights are reserved by wenglor.
- Commercial reproduction or any other commercial use of the provided content and information, in particular graphics and images, is not permitted without previous written consent from wenglor.

2 For Your Safety

2.1 Use for Intended Purpose

This sensor is used to monitor fill levels and for the detection of media.

The LevelTech works in accordance with the frequency sweep principal:

Together with its environment, an electrode integrated into the tip of the sensor functions as a capacitor. The medium determines the capacitance value depending on its dielectric constant.

A resonant circuit is created in combination with a coil in the sensor's electronics. The switching signal is triggered depending on the measured resonant frequency and the programmable switching window. The sensor may only be used for detecting the fill levels of liquids and solids with a dielectric constant greater than 1.5. The sensor may only be used for media to which the housing material and the tip of the sensor are resistant.

This Product Can Be Used in the Following Industry Sectors:

- Special-purpose mechanical engineering
- Heavy mechanical engineering
- Logistics
- Automotive industry
- Food industry
- Packaging industry
- Pharmaceuticals industry
- Plastics industry
- Woodworking industry
- Consumer goods industry
- Paper industry
- Electronics industry
- Glass industry
- Steel industry
- Aviation industry
- Chemicals industry
- Alternative energies
- Raw materials extraction

2.2 Use for Other than the Intended Purpose

- Not a safety component in accordance with 2006/42/EC (Machinery Directive).
- The product is not suitable for use in potentially explosive atmospheres.
- The product may be used only with accessories supplied or approved by wenglor, or in combination with approved products. A list of approved accessories and combination products can be found at www.wenglor.com on the product detail page.



⚠ DANGER

Risk of personal injury or property damage in case of use for other than the intended purpose!

Use for other than the intended purpose may lead to hazardous situations.

→ Observe instructions regarding use for intended purpose.

2.3 Personnel Qualifications

- Suitable technical training is a prerequisite.
- In-house electronics training is required.
- Trained personnel who use the product must have (permanent) access to the operating instructions.

⚠ DANGER

Risk of personal injury or property damage in case of incorrect initial start-up and maintenance!

Personal injury and damage to equipment may occur.

→ Adequate training and qualification of personnel

2.4 Modification of Products

⚠ DANGER

Risk of personal injury or property damage if the product is modified!

Personal injury and damage to equipment may occur. Noncompliance may result in loss of the CE and/or UKCA mark and voiding of the warranty.

→ Modification of the product is not permitted

2.5 General Safety Precautions

INFORMATION

These instructions are an integral part of the product and must be kept on hand for the entire duration of its service life.

In the event of possible changes, the current version of the operating instructions can be found at www.wenglor.com in the product's separate download area.

Read the operating instructions carefully before using the product.

Protect the sensor against contamination and mechanical influences.

Installation and removal of the product are only permissible in pressure-free piping systems which have been allowed to cool down.

2.6 Approvals and protection classes

3 Technical Data

3.1 General Data

	FXPL005
Sensor-specific data	
Measuring principle	Frequency sweep
Measuring Range > DK***	1.5
Medium	Liquids, granulate, powder
Response Time	0.04 s
ambient conditions	
Media temperature TM (TU < 50 °C)	-40...115 °C**
Media temperature TM brief (TU < 50 °C, t < 1 h)	-40...130 °C
Ambient temperature	-40...85 °C
Storage temperature	-40...85 °C
Pressure Resistance	10 bar
Electrical data	
Supply Voltage	8...35 V DC
Current Consumption (Ub = 24 V)	< 53 mA
Number of Switching Outputs	2
Power-up Time	< 1.5 s
Switching Output/Switching Current	100 mA
Switching Output Voltage Drop	≤ 1.9 V
Signal source	Change of medium
Leakage Current	< 100 µA
Short Circuit Protection	yes
Reverse Polarity Protection	yes
Interface	IO-Link V1.1
Mechanical Data	
Setting Method	Teach-In IO-Link
Housing Material	Stainless steel, V4A (1.4404/316L) Plastic, PC
Material in contact with media	Plastic, PEEK
Degree of Protection	IP67 IP69K
Connection	M12 × 1; 4-pin
Connector Plug Material	Polycarbonate
Process Connection	G 1/2" hygienic
Safety technology data	
MTTFd (EN ISO 13849-1)	633.2 a
Function	
Attenuation (adjustable)	0...10 s
Selective fill-level measurement	yes
General data	
Scope of delivery	1 × initial start-up instructions 1 × sensor
Output functions	
Output	Push-pull

	FXPL005
Circuit	NO
Adjustable parameters	
Output	Push-pull NPN PNP
Circuit	NC NC/NO NO
Other parameters	Adaptive trigger Window trigger

* mounted in closed metal tank
** TM= temperature of medium; TU= ambient temperature
*** The relative dielectric constant of the medium to be detected must be greater than 1.5. (DC = dielectric constant)



INFORMATION

When using pin 2 as an analog output, the ambient temperature may only be within -40...65 °C.

3.2 Default Settings

Pin 4	Output	Switching output
	Output function	Push-pull NO
	Polarity	Push-pull
	Working mode	Window trigger
	Switching window min	0%
	Switching window max	75%
	Hysteresis	3%
	Attenuation	0.1 s
Pin 2	Output	Switching output
	Output function	Push-pull NC
	Polarity	Push-pull
	Working mode	Window trigger
	Switching window min	75%
	Switching window max	100%
	Hysteresis	3%
	Attenuation	0.1 s

3.3 Housing Dimensions

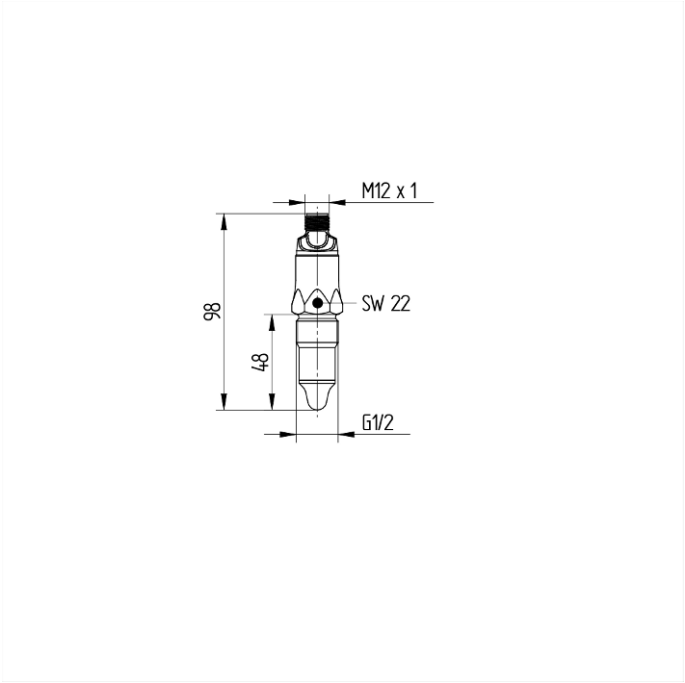

Dimensions in mm (1 mm = 0.03937 inch)

3.4 Complementary Products

wenglor offers you the right connection and mounting technology as well as other accessories for your product. You can find this at www.wenglor.com on the product details page at the bottom.

3.5 Layout

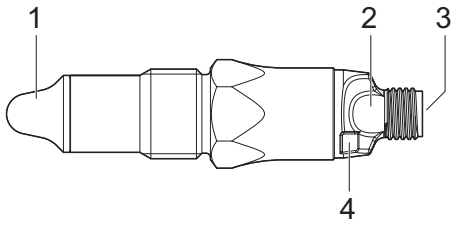

1 = Sensor tip

2 = LED

3 = Connection with M12 plug

4 = Non-contact teaching detector

4 Transport and Storage

4.1 Transport

Upon receipt of shipment, the goods must be inspected for damage in transit. In the case of damage, conditionally accept the package and notify the manufacturer of the damage. Then return the device, making reference to damage in transit.

4.2 Storage

The following points must be taken into consideration with regard to storage:

- Do not store the product outdoors.
- Store the product in a dry, dust-free place.
- Protect the product against mechanical impacts.
- Protect the product against exposure to direct sunlight.



NOTICE

Risk of property damage in case of improper storage!

The product may be damaged.

→ Storage instructions must be complied with.

5 Installation and Electrical Connection

5.1 Installation

- Protect the product from contamination during installation.
- Observe all applicable electrical and mechanical regulations, standards and safety rules.
- Protect the product against mechanical influences.
- Make sure that the sensor is mounted in a mechanically secure fashion.
- Specified torque values must be observed.

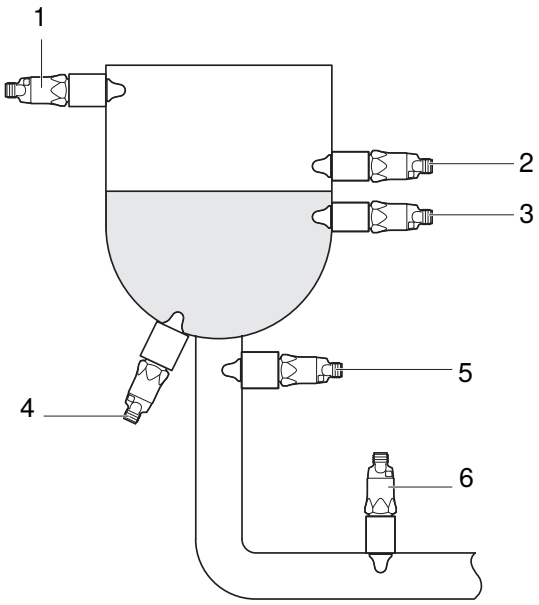

1	Overfill protection	2	Limit level max.
3	Limit level min.	4	Dry-running protection
5	Dry-running protection	6	Dry-running protection

The sensor can be mounted in any position on the vessel. A sensor (1) mounted on the top of the vessel protects against overfilling. Sensors located further down detect a maximum (2) or minimum (3) level. A sensor (4,5,6) mounted at the bottom or on the outlet pipe can protect a connected pump from running dry.

NOTICE

The sensor can be mounted in any position on the vessel. However, the following mounting instructions must be observed for hygienically correct positioning of the sensor.

INFORMATION

The LevelTech sensor should only be installed on closed metal containers in order to comply with the EMC directive DIN EN 61326.

NOTICE

Risk of property damage in case of improper installation!

The product may be damaged!

→ Comply with installation instructions.

⚠ CAUTION

Risk of personal injury or property damage during installation!

Personal injury and damage to the product may occur.

→ Ensure a safe installation environment.

Hygienic Mounting

⚠ WARNING

Health hazard due to contaminated medium

Only use EHEDG-certified welded sockets or adapters from wenglor. Welding work may only be carried out by welders trained in hygiene.

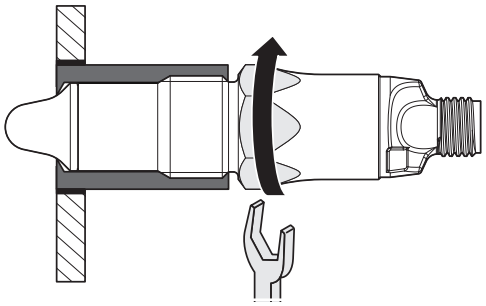

- The weld-in socket or the adapter must be mounted hygienically and flush on the inside. It must be ensured that there is no dead space in a position that can be completely emptied.
- Weld seams must be ground down to Ra < 0.8 µm and must comply with EHEDG-specific guidelines 9 and 35.
- The adapter must be welded in with the leak hole facing downwards
- Tightening torque: 15...20 Nm
- Pressure load up to 10 bar

Example of Installation with ZH4C010 Mounting Adapter in a Tank:

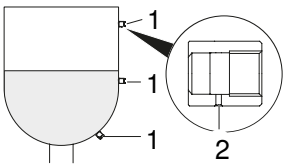

1	Adapter ZHF4C010	2	Hole for leakage

INFORMATION

Make sure that the fill-level sensor is mounted flush with the inside of the tank wall. If there is still a dead space for technical reasons, the cleanability of all surfaces must be ensured. In particular, the sensor must be aligned so that the spray jet of the cleaning device can reach all surfaces at all times. For the dead space, the following applies as shown in the diagram below: Ln ≤ (D-d)

The adapter must be welded in with the leak hole facing downwards.

Example of Installation with ZH4C010 Mounting Adapter in a Pipe

When installing in a pipe, a self-draining position must also be observed. This results in installation >5° above the horizontal, i.e. within the 170° angle highlighted in green here.

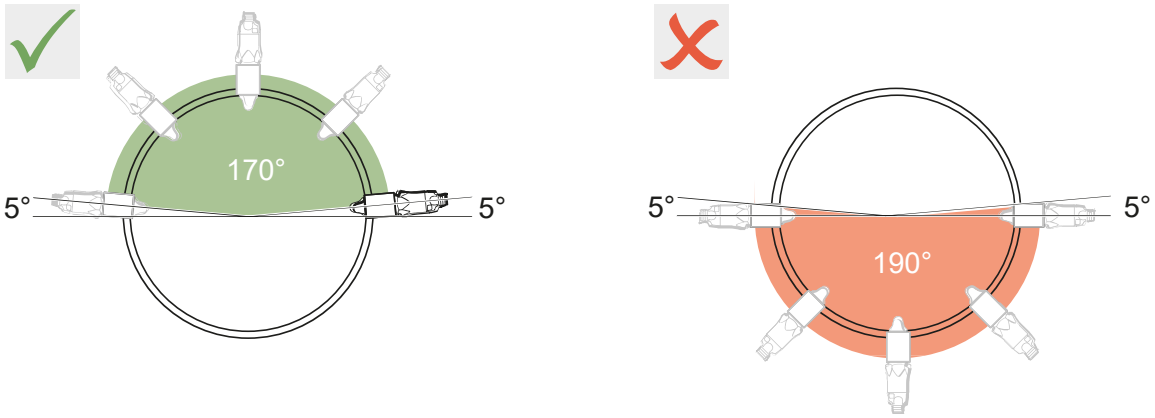

INFORMATION

Regardless of the selected process connection, the resulting dead space must be avoided as far as possible during installation in pipelines. The dead space depth (Ln) must not exceed the following value: Ln= ≤ D – d

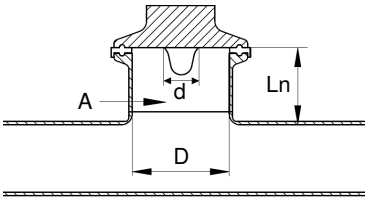

A = Dead space
Ln = Depth of the dead space
d = Diameter of the protruding sensor tip
D = Inner diameter of the dead space

5.2 Cleaning

To enable hygienic cleaning, the information on sensor installation mentioned in the chapter Installation [▶ 11] must be observed. Cleaning agents suitable for the material must be selected that do not impair the resistance of the materials.

The sensors are suitable for CIP cleaning and sterilization (SIP) without the need for disassembly.

5.3 Electrical Connection

- Wire the sensor according to the connection diagram.
- Switch on the supply voltage (see section Technical Data [▶ 7]).
- Connect the sensor to 8...36 V DC.
- When operated with IO-Link:
  - An IO-Link master with class A port must be used because pin 5 is not connected in the case of a class A port.
  - In the case of excessive interference, a shielded cable should be used.

⚠ DANGER

Risk of personal injury or property damage due to electric current.

Live parts may cause damage to persons and equipment.

→ The electrical device may only be connected by qualified personnel.

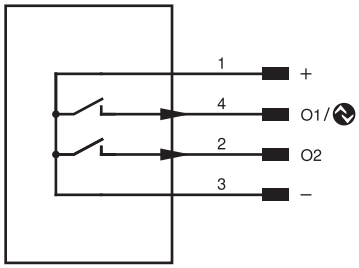

pin	Pin function	Polarity	Circuit
1	Supply voltage +		
2	switching output	push-pull	NO
3	Supply voltage 0 V		
4	switching output	push-pull	NO

5.4 Diagnostics

The sensor is equipped with status LEDs that indicate both the output status and any error messages. The following table provides a detailed explanation of the corresponding color codes.

	Status	Cause
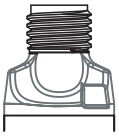	LEDs off	No voltage supply
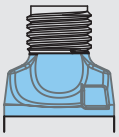	LEDs lit blue	Sensor ready for operation
	LEDs are lit white	Only the " O1 " switching output is active.
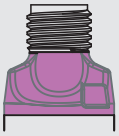	LEDs are lit in purple	Only switching output O2 is active.
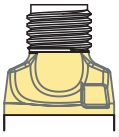	LEDs light up yellow	Both outputs are active. This display only appears when both outputs are used as switching outputs.
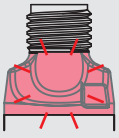	LED flashing red	An error has occurred.

The visual indication of the switching output depends on whether it functions as a normally open (NO) or normally closed (NC) contact:

Status	Meaning
NO inactive	LEDs light up blue
NO active	LEDs light up in the color mentioned above
NC inactive	LEDs light up in the color mentioned above
NC active	LEDs light up blue



NOTICE

Required action in case of fault:

1. Shut down the machine.
2. Analyze and eliminate the cause of error with the aid of the diagnostics information.
3. If the error cannot be eliminated, please contact wenglor's support department.
4. Do not operate in case of indeterminate malfunctioning.
5. The machine must be shut down if the error cannot be definitively explained or properly eliminated.



⚠ DANGER

Risk of personal injury or property damage in case of non-compliance!

The system's safety function is disabled. Personal injury and damage to equipment may occur.

→ Required action as specified in case of fault.

6 Settings

The sensor can be configured using either teach-in, wTeach2, or IO-Link.

If foam formation or buildup of media needs to be detected, configuration via wTeach2 is recommended.

For configuration via IO-Link and wTeach2, the sensor is connected to a suitable IO-Link master (see product detail page/Complementary Products). The interface protocol and the IODD can be found at www.wenglor.com in the download section for the respective product.

For installation, connection, and setup of the wTeach2 software as well as general functions, see the wTeach2 operating instructions. These are available online at www.wenglor.com in the download section under order number DNNF005.

6.1 Settings via teach-in

Using contactless teach-in, the switching outputs O1 and O2 can be configured independently of each other.

O1 is a normally open (NO) contact and O2 is a normally closed (NC) contact.

INFORMATION

Configuration is only possible within the first 5 minutes after connecting the power supply. After that, contactless teach-in is disabled.

- Sensor is connected.
- Hold a screwdriver or other metal object over the teach detector.

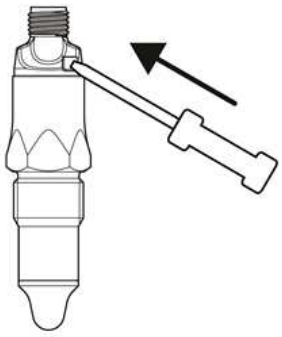

The LED flashes green at a frequency of 1 Hz for 3 seconds. To select the switching output, the LED alternates between white and violet at 2-second intervals.

- When the LED lights up in the color of the desired switching output, remove the screwdriver or metal object from the teach detector to select the corresponding switching output:
  - O1: White
  - O2: Violet

The LED flashes at a frequency of 0.5 Hz in the desired color.

- Immerse the sensor tip into the medium and touch the teach area with the object.

The LED flashes in the selected color while the teach-in process is running. To select the switching window afterward, remove the screwdriver or metal object from the teach detector again.

To select the switching window, the LED changes color between light blue, white, and violet at 2-second intervals.

- Hold the screwdriver or other metal object against the teach detector.
- When the LED lights up in the color of the desired switching window, remove the screwdriver or metal object from the teach detector to select the corresponding switching window:

– Switching window ±12%, hysteresis 4%: light blue
– Switching window ±6%, hysteresis 2%: white
– Switching window ±3%, hysteresis 1%: violet

The configuration is complete and changes are saved.

If the DC value of the medium is close to the value for air, select the narrowest switching window. If the LED flashes red (indicating a fault) or the 5-minute configuration time has been exceeded, no changes will be saved.

- To restart the configuration, disconnect and reconnect the power supply.

Graphical representation:

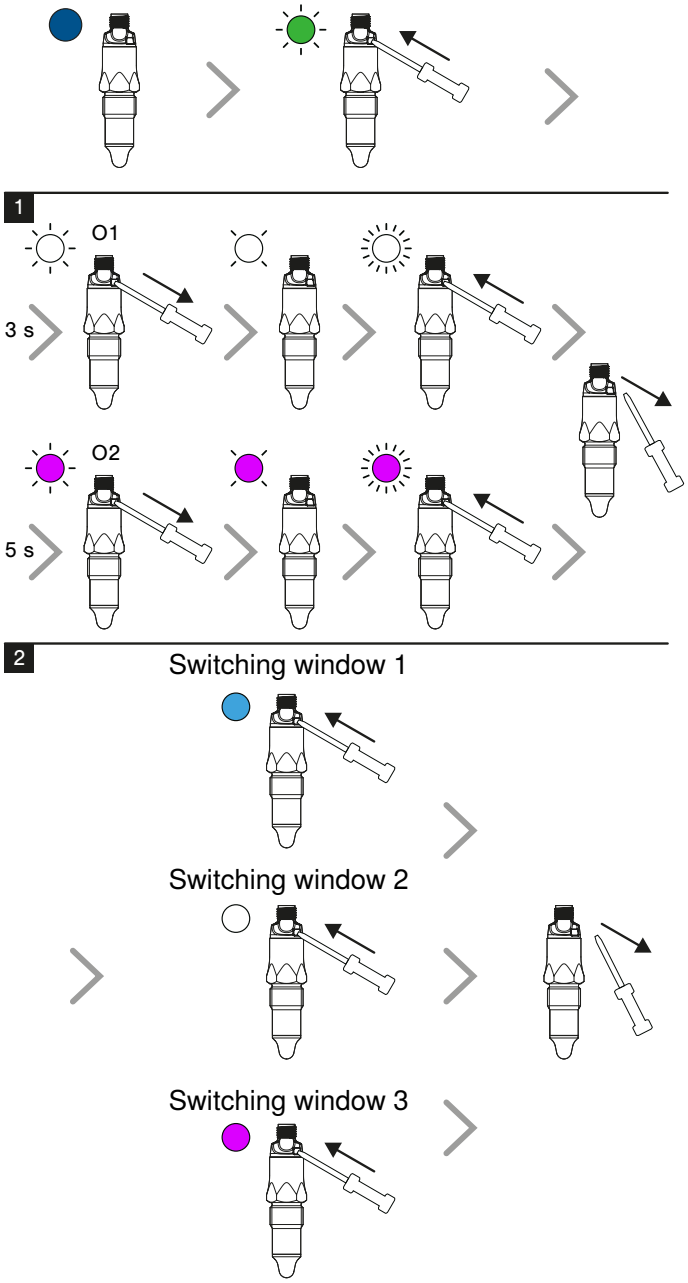

1. Ready for teaching; immerse the sensor in the medium.
2. Switching window: Hold the tool until the desired switching window appears.

6.2 Pin function

The following describes the main pin functions.

pin	Possible settings	Default
O1	**switching output** For setting options, see Window Trigger [▶ 18] and Adaptive Trigger [▶ 18]. Disabled	switching output
O2	**switching output** For configuration options, see Window Trigger [▶ 18] and Adaptive Trigger [▶ 18]. **current output** Scalable and invertible Disabled	Switching output

6.3 Window Trigger

The window trigger is used to define the respective switching windows for each switching output. If the input signal falls within the limit values, the switching output is triggered. This allows different media to be distinguished from one another, e.g., oil versus water or beer versus foam.

The window trigger is enabled by default. The following settings and default values apply:

Parameter	Possible Settings	Default settings
Lower limit of the switching window	0...100%	O1: 0% O2: 75%
Upper limit of the switching window	0...100 %	O1: 75% O2: 100%
hysteresis	0...50 %	3%
Damping (rise time/ fall time delay)	0...10 s	0.1 s
Polarity	NPN / PNP / push-pull / Inactive	push-pull
Circuit	Normally Open (NO) The output is high when the condition is met, depending on the setting. Normally closed (NC) The output is low if the condition is met, depending on the setting.	O1: NO O2: NC

6.4 Adaptive Trigger

The adaptive trigger is a plug-and-play solution for applications involving frequent changes in the medium. Normally, no additional sensor configuration is required to use the adaptive trigger, as the sensor automatically adjusts to the new medium and triggers the output signal.

To avoid existing interference, e.g., due to buildup, the empty state of the tank can be taught if necessary. Furthermore, additional measurement stabilization can be activated so that the switching output only switches when the input signal has been stable for at least 1 second.

The following conditions must be met for the use of the adaptive trigger:

- The input signal must be as stable as possible
- To receive a switching signal, the new measured value must differ from the old measured value by at least 3%.
- The sensor must be in air during the ramp-up phase in the medium of air

NOTICE

If a medium is being measured whose DC value is lower than that of the previously measured medium, the sensor tip must be cleaned.

The window trigger is enabled by default. When switching to the adaptive trigger, the following setting options and default settings apply:

Parameter	Possible settings	Default settings
Threshold 1	0...100 % Below the threshold value, the adaptive trigger is always active. Deactivation occurs only once the threshold value and the trigger distance are exceeded.	0
Threshold 2	0...100 % Above the threshold value, the adaptive trigger is inactive. Switching occurs as soon as the input signal falls below the threshold value and the trigger distance is exceeded.	100%
Damping (Rise/fall time delay)	0...10 s Rise/fall time delay	0.1 s
Trigger distance	3...50 % Setting the sensor sensitivity. This defines by how many percent the new measured value must deviate from the previous measured value for the sensor to switch.	3%
Start level	0...100% The start level defines whether the switching output should be activated when the power supply is connected. If the measurement level is below the start level when the sensor is connected, the switching output is activated.	0
Stabilization function	On / Off / Inactive If the stabilization function is enabled, the input signal must be stable for at least one second for the switching output to activate.	Off
Polarity	NPN / PNP / push-pull / Inactive	push-pull
Circuit	Normally Open (NO) The output is high when the condition is met, depending on the setting. Normally closed (NC) The output is low if the condition is met, depending on the setting.	O1: NO O2: NC

7 Maintenance Instructions



NOTICE

This wenglor product is maintenance-free.

Cleaning and inspection of the plug connections at regular intervals are advisable.

Do not clean the product with solvents or cleaning agents that could damage the product.

The product must be protected against contamination during initial start-up.

Contamination which adheres to the measuring probe distorts the measured value for flow rate.

8 Returns

Due to legal regulations and for the protection of employees, wenglor sensoric GmbH requires a signed declaration of decontamination before your order can be processed.

The corresponding form is available at www.wenglor.com → Download → General Terms and Conditions and Returns.

9 Proper Disposal

wenglor sensoric GmbH does not accept the return of unusable or irreparable products. Respectively valid national waste disposal regulations apply to product disposal.

10 Declarations of Conformity

Declarations of conformity can be found on our website at www.wenglor.com in the product's separate download area.