wenglor
the innovative family

Technical Data
IR5D002
Inductive Sensor
Ring sensor

reddot winner 2025



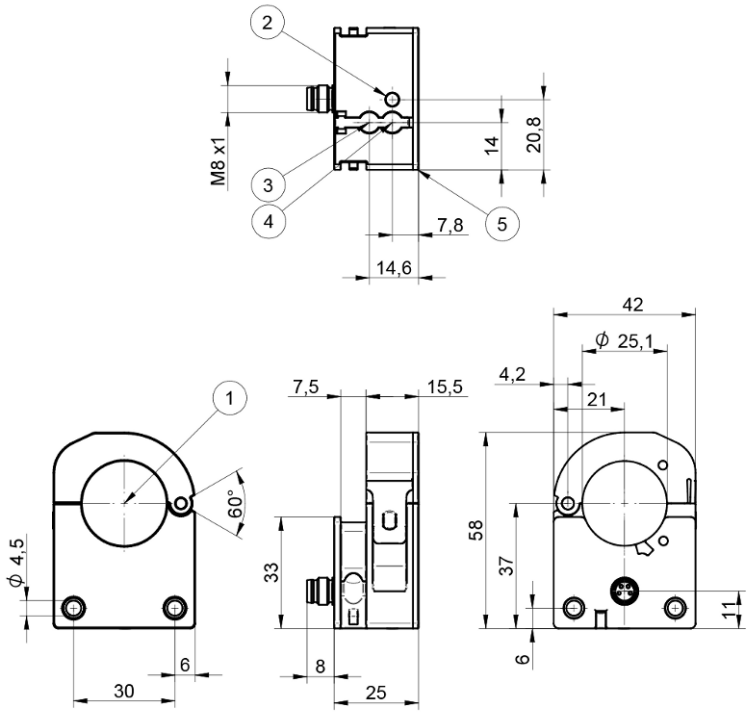

Symbol	Key
1	Active range
2	Status indicator/setup aid
3	Pulse duration adjuster
4	Sensitivity adjuster
5	Display unit

EN

Dimensions in mm
Subject to change without notice
Version 1
www.wenglor.com

Technical data

Inductive Data	
Inside diameter	25.1 mm
Max. tube diameter	25 mm
Installation A/Bx/By/C in mm	0/42/100/10
Installation A/Bx/By/C in mm with frequency switching	0/0/0/10
Principle	Dynamic
Smallest recognizable object (Ø)	4 mm*
Correction Factors Stainless Steel V2A/CuZn/Al	1/1/1

Electrical Data	
Supply Voltage	10...30 V DC
Current Consumption (Ub = 24 V)	< 25 mA
Object speed	0.1...50 m/s
Response Time	< 300 µs
Ready-state delay	< 1.5 s
Switching Output Voltage Drop	1.5 V
Temperature Range	0...60 °C
Short Circuit Protection	yes
Overload Protection	yes
Reverse Polarity Protection	yes
Switching Output/Switching Current	100 mA
Pulse extension	200 ms
Interface	IO-Link V1.1
IO-Link Version	1.1

Mechanical Data	
Connection Type	Plug variant
Connection	M8 × 1; 4-pin
Setting Method	Potentiometer/IO-Link
Housing Material	Plastic, PA
Hanger opening/closing cycles	Max. 100
Degree of Protection	IP54

Safety-relevant Data	
MTTFd (EN ISO 13849-1)	1018.99 a

General Data	
Scope of delivery	1 × sensor 1 × ZR0E001 soft binder
Packaging unit	1 Piece

Adjustable parameters	
Output	PNP Push-pull NPN

Adjustable parameters	
Circuit	NO NC NC/NO
Pulse extension	5...200 ms
Other parameters	Sensitivity Error indicator Frequency switching

All other parameters can be found in the product documentation.

* Relates to a steel ball when the setting potentiometer max. is selected

BMECat data	
eCl@ss 5.1.4	27-27-01-01 Inductive proximity switch
eCl@ss 6.x	27-27-01-01 Inductive proximity switch
eCl@ss 7.0	27-27-01-01 Inductive proximity switch
eCl@ss 7.1	27-27-01-01 Inductive proximity switch
eCl@ss 8.x	27-27-01-01 Inductive proximity switch
eCl@ss 10.0.1	27-27-01-01 Inductive proximity switch

Technical illustrations

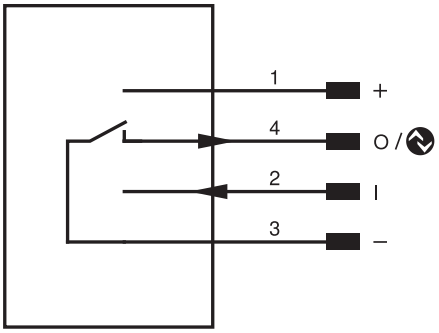

Pin	Pin function	Polarity	Circuit
1	Supply Voltage +		
2	Alternative frequency activation input	High active	
3	Supply voltage 0 V		
4	Switching output IO-Link	NPN	NO

Illustration 1: Mounting

