Flat Dome Light

infrared, 800 × 800 mm

LFDI801

Part Number

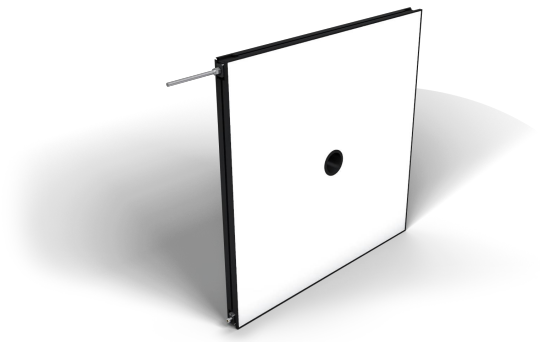

- **Easy and flexible installation**
- **High homogeneity**
- **High performance: high intensity even in continuous mode**
- **No external control required**

The LFD series flat dome lights are high-diffuse lights with a camera connection. Due to their intense luminous flux and high homogeneity, they are perfectly suited for large-area applications such as robot-assisted pick-and-place. They can be used in continuous mode or synchronized with the machine vision camera in strobe mode via PNP or NPN inputs. The light is characterized by its narrow edges (4 mm) and easy mounting thanks to the T-slot fastener and the anchor point around the housing. Cameras can be connected easily on the rear of the light.

Technical Data

Optical Data	
Light Source	Infrared Light
Wavelength	850 nm
Risk Group (EN 62471)	1
Infrared light output	119 W/m²
Electrical Data	
Supply Voltage	21,6...26,4 V DC
Power	439,2 W
Current Consumption Continuous Mode (Ub = 24 V)	18,3 A
Rise time	15 µs
Fall time	10 µs
Input signal	NPN
Input signal	PNP
Temperature Range	-10...40 °C
Storage temperature	-20...60 °C
Short Circuit Protection	yes
Reverse Polarity Protection	yes
Overload Protection	yes
Protection Class	III
Dimming	0....10 V ≙ 100...30%
OverDrive	no
Mechanical Data	
Luminous Field Length (L)	800 mm
Luminous Field Width (W)	800 mm
Luminous Field	800 × 800 mm
Housing Material	Aluminum, anodised
Housing Material	Plastic, ABS-GF
Degree of Protection	IP50
UL Enclosure Type	1
Optic Cover	Plastic, PMMA
Connection	M12 × 1; 5-pin
Max. cable lenght	10 m
Camera aperture inner diameter	65 mm
Function	
Operating modes	Continuous, Strobe
Connection Diagram No.	007
Suitable Mounting Technology No.	926

Complementary Products

ZC4G003 connection cable
ZDCG004 connection cable
ZDCG005 connection cable

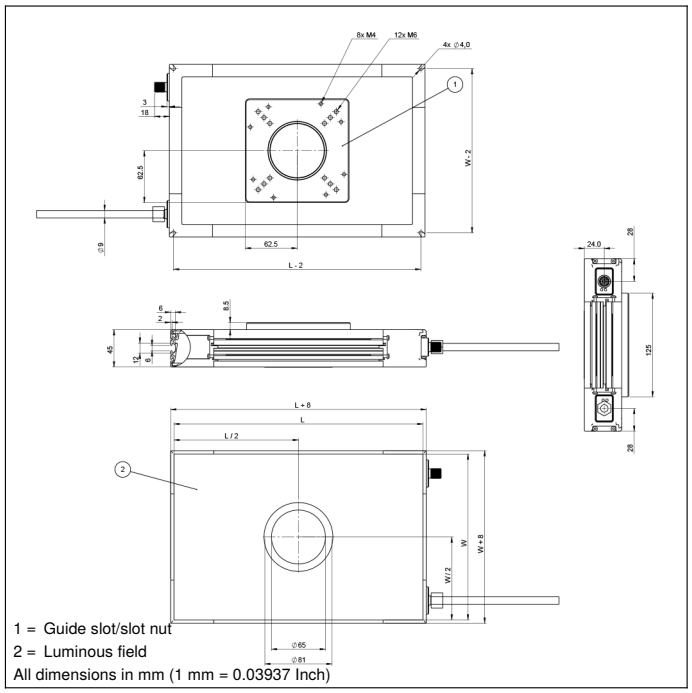

Ctrl. Panel

T16

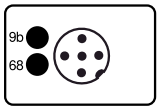

68 = Power LED
9b = Strobe Mode Indicator

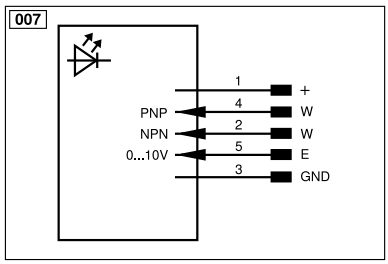

Legend					
+	Supply Voltage +	PT	Platinum measuring resistor	ENARS422	Encoder A/Ā (TTL)
–	Supply Voltage 0 V	nc	Not connected	ENBRS422	Encoder B/B̄ (TTL)
~	Supply Voltage (AC Voltage)	U	Test Input	ENA	Encoder A
A	Switching Output (NO)	Ū	Test Input inverted	ENB	Encoder B
Ā	Switching Output (NC)	W	Trigger Input	AMIN	Digital output MIN
V	Contamination/Error Output (NO)	W–	Ground for the Trigger Input	AMAX	Digital output MAX
V̄	Contamination/Error Output (NC)	O	Analog Output	AOK	Digital output OK
E	Input (analog or digital)	O–	Ground for the Analog Output	SY In	Synchronization In
T	Teach Input	BZ	Block Discharge	SY OUT	Synchronization OUT
R	Reset input	AMV	Valve Output	OLT	Brightness output
Z	Time Delay (activation)	a	Valve Control Output +	M	Maintenance
S	Shielding	b	Valve Control Output 0 V	rsv	Reserved
RxD	Interface Receive Path	SY	Synchronization	Wire Colors according to DIN IEC 60757	
TxD	Interface Send Path	SY–	Ground for the Synchronization	BK	Black
RDY	Ready	E+	Receiver-Line	BN	Brown
GND	Ground	S+	Emitter-Line	RD	Red
CL	Clock	⏚	Grounding	OG	Orange
E/A	Output/Input programmable	SnR	Switching Distance Reduction	YE	Yellow
	IO-Link	Rx+/–	Ethernet Receive Path	GN	Green
PoE	ower over Ethernet	Tx+/–	Ethernet Send Path	BU	Blue
IN	Safety Input	Bus	Interfaces-Bus A(+)/B(–)	VT	Violet
OSSD	Safety Output	La	Emitted Light disengageable	GY	Grey
Signal	Signal Output	Mag	Magnet activation	WH	White
BI_D+/–	Ethernet Gigabit bidirect. data line (A-D)	RES	Input confirmation	PK	Pink
EN0 RS422	Encoder 0-pulse 0/0̄ (TTL)	EDM	Contactor Monitoring	GNYE	Green/Yellow

Specifications are subject to change without notice V1-14.07.2026