wenglor
the innovative family

Technical Data
P1HJ001
Fork Sensor



Symbol	Key
1	Emitters
2	Receiver diode
3	Multi-function button

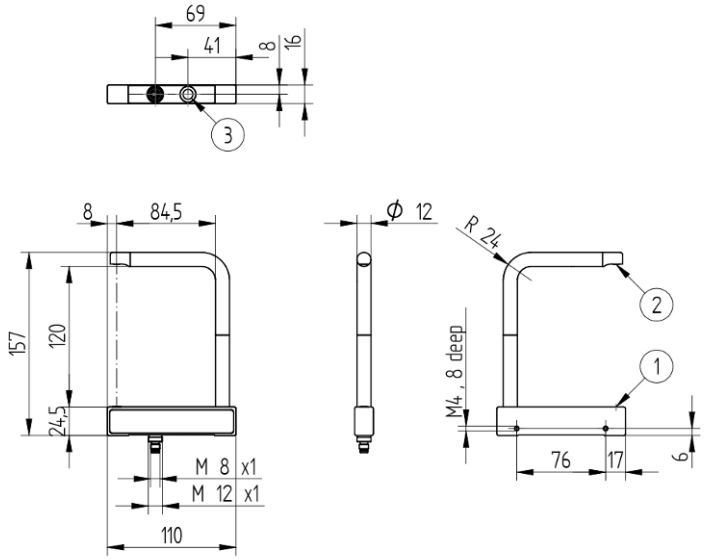

EN

Dimensions in mm
Subject to change without notice
Version 0
www.wenglor.com

Technical data

Optical Data	
Fork Width	120 mm
Smallest Recognizable Part	40 µm
Smallest Detectable Gap	50 µm
Switching Hysteresis	< 10 %
Light Source	Laser, red
Light spot geometry	Collimated
Service Life (T = +25 °C)	100000 h
Laser Class (EN 60825-1)	1
Max. Ambient Light	10000 Lux
Light Spot Diameter	0.35 mm
Repeat Accuracy	< 5 µm

Electrical Data	
Supply Voltage	10...30 V DC
Current Consumption (Ub = 24 V)	< 25 mA
Switching Frequency	10 kHz
Response Time	50 µs
Temperature Range	-25...60 °C
Switching Output Voltage Drop	< 2.5 V
PNP Switching Output/Switching Current	100 mA
Short Circuit Protection	yes
Reverse Polarity Protection	yes
Overload Protection	yes
Teach Mode	NT, MT
Protection Class	III

Mechanical Data	
Setting Method	Teach-In
Housing Material	Stainless steel, V4A (1.4404/316L)
Optic Cover	Glass
Degree of Protection	IP69K
Connection Type	Plug variant
Connection	M8 × 1; 4-pin

Safety-relevant Data	
MTTFd (EN ISO 13849-1)	1615.89 a

General Data	
Scope of delivery	1 × initial start-up instructions 1 × sensor
Approvals	Ecolab FDA compliant

Adjustable parameters	
Circuit	NC NC/NO NO

All other parameters can be found in the product documentation.

BMECat data	
eCl@ss 5.1.4	27-27-09-09 Fork sensor
eCl@ss 6.x	27-27-09-09 Fork sensor
eCl@ss 7.0	27-27-09-09 Fork sensor
eCl@ss 7.1	27-27-09-09 Fork sensor
eCl@ss 8.x	27-27-09-09 Fork sensor
eCl@ss 10.0.1	27-27-09-09 Fork sensor

Technical illustrations

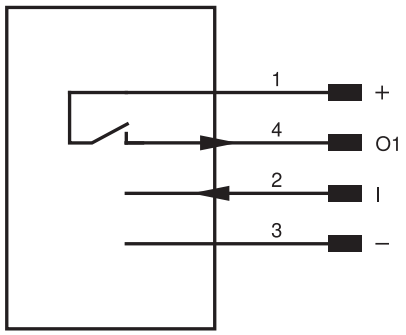

Pin	Pin function	Polarity	Circuit
1	Supply Voltage +		
2		High activ	
3	Supply voltage 0 V		
4	Switching output	PNP	NO