wenglor
the innovative family

Technical Data

P1KL012

Retro-Reflex Sensor

Universal

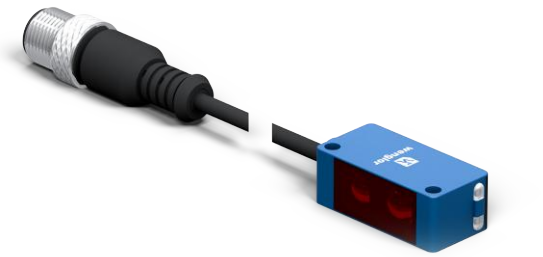

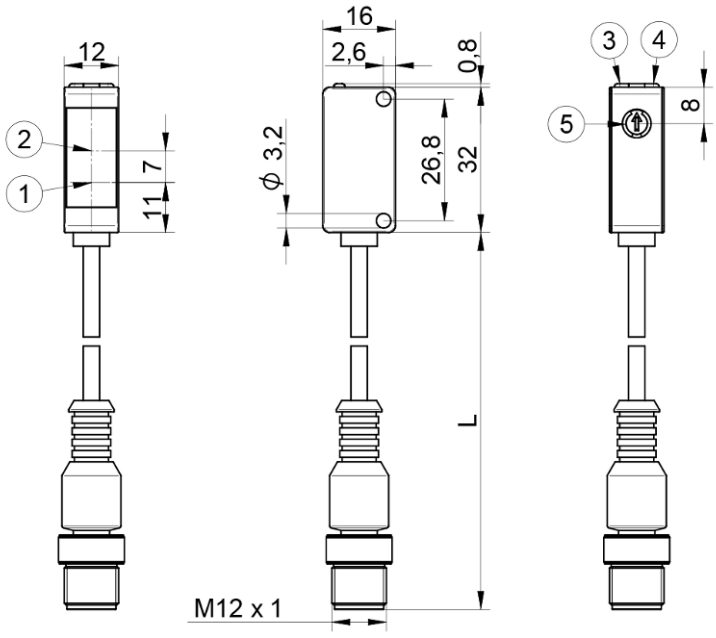

Symbol	Key
1	Emitter diode
2	Receiver diode
3	Power LED
4	Switching status indicator/contamination warning
5	Switching distance adjuster
L	Cable length

EN

Dimensions in mm
Subject to change without notice
Version 1
www.wenglor.com

Technical data

Optical Data	
Range	5000 mm
Reference Reflector/Reflector Foil	RQ100BA
Smallest Recognizable Part	see table 2
Switching Hysteresis	< 10 %
Light Source	LED, red
Polarization Filter	yes
Service Life (T = +25 °C)	100000 h
Max. Ambient Light	10000 Lux
Light Spot Diameter	see table 1
Optics	Two-Lens Optic
Optical axis	Aligned
Switching point	Calibrated

Electrical Data	
Supply Voltage	10...30 V DC
Supply Voltage with IO-Link	18...30 V DC
Current Consumption (Ub = 24 V)	< 20 mA
Switching Frequency	2000 Hz
Switching frequency (speed mode)	3500 Hz
Response Time	0.25 ms
Response time (speed mode)	0.14 ms
Temperature Drift	< 10 %
Temperature Range	-40...60 °C
Switching Output Voltage Drop	< 2 V
Switching Output/Switching Current	100 mA
Residual Current Switching Output	< 50 µA
Short Circuit Protection	yes
Reverse Polarity Protection	yes
Overload Protection	yes
Lockable	yes
Interface	IO-Link V1.1
Protection Class	III

Mechanical Data	
Setting Method	Potentiometer
Housing Material	Plastic, ABS/PC
Degree of Protection	IP67 IP68
Connection Type	Plug with cable
Connection	M12 × 1; 4-pin
Cable length (L)	200 mm
Cable Jacket Material	Plastic, PUR
Optic Cover	Plastic, PMMA

Safety-relevant Data	
MTTFd (EN ISO 13849-1)	2808.97 a

General Data	
Scope of delivery	1 × initial start-up instructions 1 × sensor

Adjustable parameters	
Output	Push-pull NPN PNP
Circuit	NC NO inactive Error output NC+NO
Other parameters	Off-delay On-delay Mode of operation Hysteresis Emitted light Switching point

All other parameters can be found in the product documentation.

BMECat data	
eCl@ss 5.1.4	27-27-09-02 Reflection light barrier
eCl@ss 6.x	27-27-09-02 Reflection light barrier
eCl@ss 7.0	27-27-09-02 Reflection light barrier
eCl@ss 7.1	27-27-09-02 Reflection light barrier
eCl@ss 8.x	27-27-09-02 Reflection light barrier
eCl@ss 10.0.1	27-27-09-02 Reflection light barrier

Technical illustrations

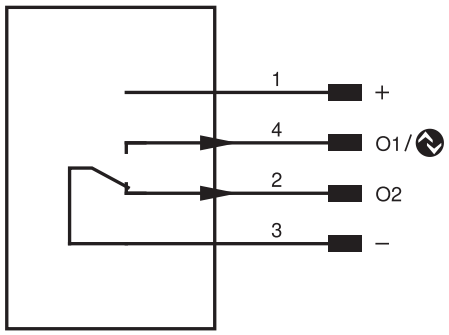

Pin	Pin function	Polarity	Circuit
1	Supply Voltage +		
2	Switching Output 2	NPN	Antivalent
3	Supply voltage 0 V		
4	Switching Output 1 IO-Link	NPN	NO

Table 1			
Working Distance	0,2 m	2 m	5 m
Light Spot Diameter	30 mm	180 mm	400 mm

Table 2			
Distance, Sensor to Reflector	1 m	2,5 m	5 m
Smallest Recognizable Part	10 mm	20 mm	30 mm

Reflector data	
RQ100BA	0.01...5 m
RE18040BA	0.01...4.5 m
RQ84BA	0.01...4.5 m
RR84BA	0.01...4.5 m
RE9538BA	0.01...2 m
RE6151BM	0.01...3.5 m
RR50_A	0.01...3 m
RE6040BA	0.01...3.5 m
RE8222BA	0.01...2.5 m
RR34_M	0.01...1.6 m
RE3220BM	0.01...1.5 m
RE6210BM	0.01...1.5 m
RR25_M	0.01...1.3 m
RR25KP	0.01...0.8 m
RR21_M	0.01...1.1 m
Z90R004	0.15...1.65 m
Z90R005	0.15...2.3 m
ZRAE02B01	0.01...2 m
ZRME01B01	0.01...0.9 m
ZRME03B01	0.01...1.6 m
ZRMR02K01	0.01...1 m
ZRMS02_01	0.01...1 m
RF505	0.02...1.9 m
RF508	0.02...1.7 m
RF258	0.02...1.4 m
ZRDF03K01	0.03...3 m
ZRDF10K01	0.03...3.5 m

Reflector type, mounting distance