wenglor
the innovative family

Technical Data

BSD4NB
Mounting Clamp

for Ø 4 mm



RoHS

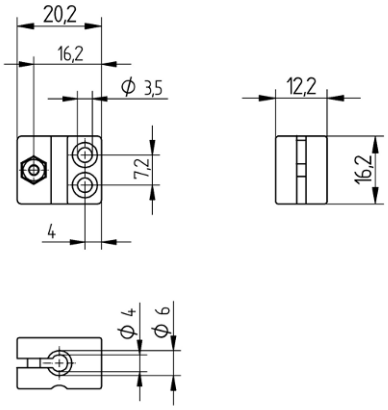

EN

Dimensions in mm
Subject to change without notice
Version 0
www.wenglor.com

Technical data

Mechanical Data	
Material	Plastic
Mounting	Non-flush Flush

General Data	
Scope of delivery	1 × mounting clamp
Packaging unit	1 Piece
Use	for round housing