wenglor
the innovative family

Technical Data

BEF-SET-06
Mounting Clamp

for Ø 34 mm



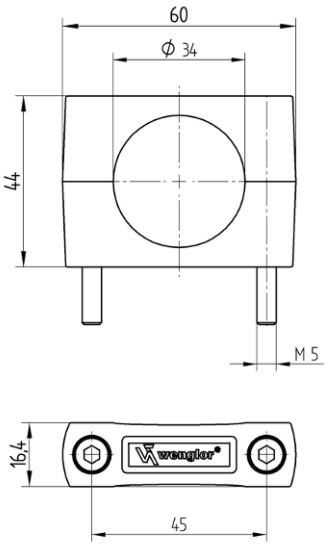

EN

Dimensions in mm
Subject to change without notice
Version 0
www.wenglor.com

Technical data

Mechanical Data	
Material	Plastic, PA Steel, galvanized
Mounting	Flush Non-flush semi-flush

General Data	
Scope of delivery	1 × mounting clamp
Packaging unit	1 Piece
Use	for round housing