Mounting Clamp
for MLWL

ZLWE011
Part Number

Technical Data

Mechanical Data	
Material	Aluminium; Plastic
Weight	600 g
Packaging unit	1 Piece

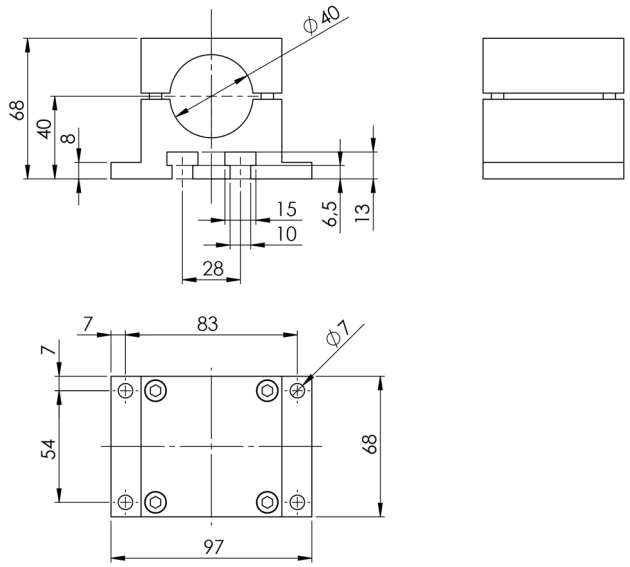

Screw M8 = 15 Nm
All dimensions in mm (1 mm = 0.03937 Inch)

Specifications are subject to change without notice V0-02.06.2023