Through Beam Sensor

ZW200NCT3

Part Number

- **Smallest Recognizable Part: 0,25 mm**
- **Teach-In, external Teach-In, RS-232 Interface**
- **Time Delay**

These through beam sensors are well suited for use in aggressive industrial environments. The sensor can be checked for correct functioning via the test input. Thanks to their large working range, the devices demonstrate excellent functional reliability in highly contaminated environments.

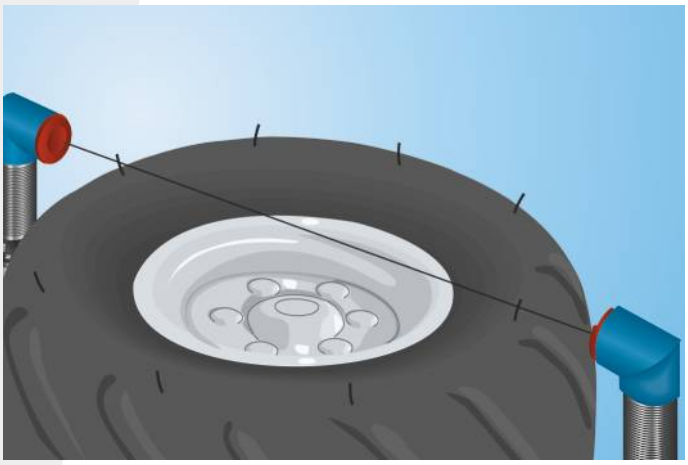

Technical Data

Optical Data	
Range	20000 mm
Smallest Recognizable Part	> 250 µm
Switching Hysteresis	< 15 %
Light Source	Laser (red)
Service Life (T = +25 °C)	100000 h
Max. Ambient Light	10000 Lux
Opening Angle	12 °
Electrical Data	
Sensor Type	Receiver
Supply Voltage	10...30 V DC
Current Consumption (Ub = 24 V)	< 15 mA
Switching Frequency	3 kHz
Response Time	166 µs
On-/Off-Delay (RS-232)	0...5 s
Temperature Drift	< 10 %
Temperature Range	-25...60 °C
Switching Output Voltage Drop	< 2,5 V
Switching Output / Switching Current	200 mA
Short Circuit and Overload Protection	yes
Reverse Polarity Protection	yes
Lockable	yes
Teach Mode	NT,MT
Protection Class	III
Mechanical Data	
Adjustment	Teach-In
Housing Material	Stainless Steel
Full Encapsulation	yes
Degree of Protection	IP67
Connection	M12 × 1; 4-pin
NPN NO/NC switchable	●
RS-232 with Adapterbox	●
Connection Diagram No.	352
Control Panel No.	D 7
Suiting Connection Technology No.	2
Suiting Mounting Technology No.	150

Suiting Emitter

ZW2003

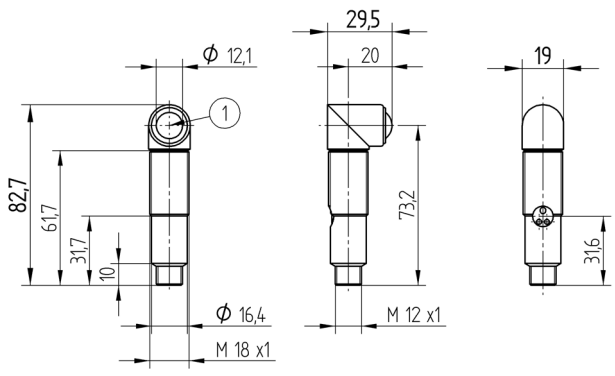

1 = Receiver Diode
All dimensions in mm (1 mm = 0.03937 Inch)

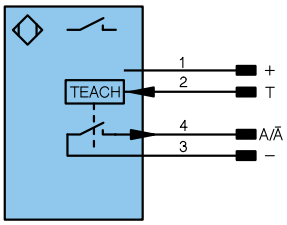

Legend

+	Supply Voltage +	U	Test Input	PoE	Power over Ethernet
–	Supply Voltage 0 V	Ū	Test Input inverted		
~	Supply Voltage (AC Voltage)	W	Trigger Input		
A	Switching Output (NO)	O	Analog Output		
Ā	Switching Output (NC)	O–	Ground for the Analog Output		Wire Colors according to DIN IEC 757
V	Contamination/Error Output (NO)	BZ	Block Discharge		
V̄	Contamination/Error Output (NC)	AMV	Valve Output	BK	Black
E	Input (analog or digital)	a	Valve Control Output +	BN	Brown
T	Teach Input	b	Valve Control Output 0 V	RD	Red
Z	Time Delay (activation)	SY	Synchronization	OG	Orange
S	Shielding	E+	Receiver-Line	YE	Yellow
RxD	Interface Receive Path	S+	Emitter-Line	GN	Green
TxD	Interface Send Path	⏚	Grounding	BU	Blue
RDY	Ready	SnR	Switching Distance Reduction	VT	Violet
GND	Ground	Rx+/–	Ethernet Receive Path	GY	Grey
CL	Clock	Tx+/–	Ethernet Send Path	WH	White
E/A	Output/Input programmable	Bus	Interfaces-Bus A(+)/B(–)	PK	Pink
	IO-Link	La	Emitted Light disengageable	GNYE	Green Yellow

Complementary Products

Adapterbox A232

Ctrl.Panel

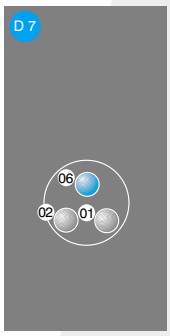

01 = Switching Status Indicator
02 = Contamination Warning
06 = Teach Button

Smallest Recognizable Part

Based on the Distance between Emitter and Receiver

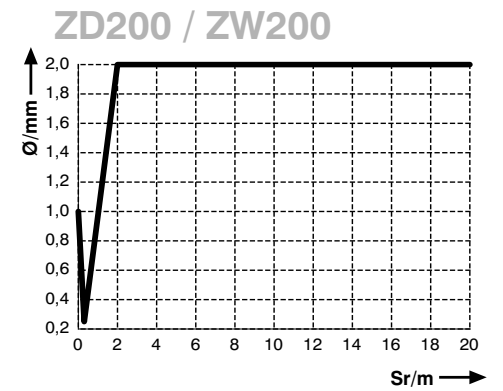

Sr = Switching Distance

Ø = Diameter, Smallest Recognizable Part

Specifications are subject to change without notice