Ring Illuminator

ZFRG11-01

Part Number

- **Flashlight mode synchronizable with image processing**
- **High illumination intensity**
- **Mounting possible directly around camera lens**
- **No formation of shades**

Technical Data

Optical Data	
Light Source	Green Light
Wave Length	530 nm
Electrical Data	
Supply Voltage	22...30 V DC
Current Consumption (Ub = 24 V)	< 600 mA
Temperature Range	0...60 °C
Reverse Polarity Protection	yes
Protection Class	III
Mechanical Data	
Housing Material	Plastic, AL
Degree of Protection	IP42
Connection	M12 × 1; 4-pin
Connection Diagram No.	749
Connection Table No.	32
Suiting Connection Technology No.	2
Suiting Mounting Technology No.	470 480

The wenglor Ring Illuminator illuminates the application evenly.
It is especially well suited for the detection of colors and prints. Even contrasts on matt surfaces are detected very well.

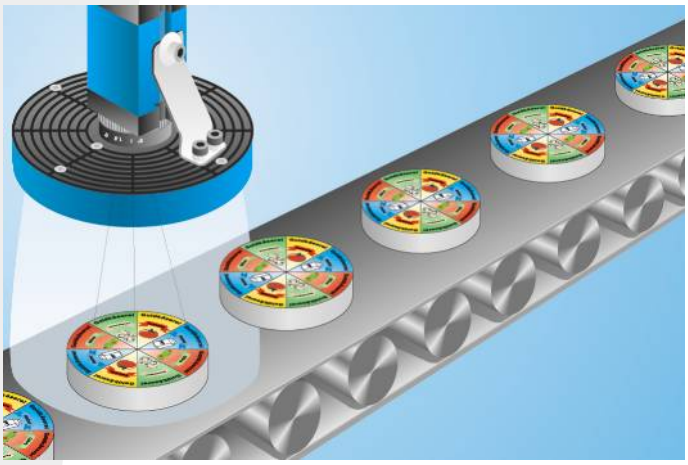

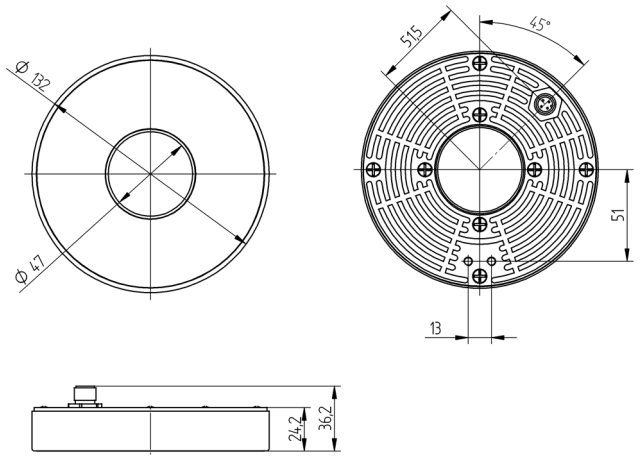

All dimensions in mm (1 mm = 0.03937 Inch)

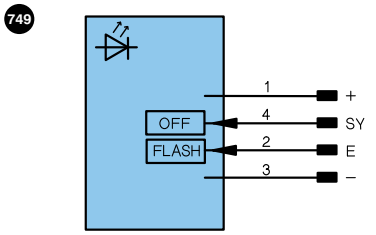

Legend

+	Supply Voltage +		U	Test Input		PoE	Power over Ethernet
–	Supply Voltage 0 V		Ū	Test Input inverted			
~	Supply Voltage (AC Voltage)		W	Trigger Input			
A	Switching Output	(NO)	O	Analog Output			Wire Colors according to DIN IEC 757
Ā	Switching Output	(NC)	O–	Ground for the Analog Output			
V	Contamination/Error Output	(NO)	BZ	Block Discharge		BK	Black
V̄	Contamination/Error Output	(NC)	AMV	Valve Output		BN	Brown
E	Input (analog or digital)		a	Valve Control Output +		RD	Red
T	Teach Input		b	Valve Control Output 0 V		OG	Orange
Z	Time Delay (activation)		SY	Synchronization		YE	Yellow
S	Shielding		E+	Receiver-Line		GN	Green
RxD	Interface Receive Path		S+	Emitter-Line		BU	Blue
TxD	Interface Send Path		⏚	Grounding		VT	Violet
RDY	Ready		SnR	Switching Distance Reduction		GY	Grey
GND	Ground		Rx+/–	Ethernet Receive Path		WH	White
CL	Clock		Tx+/–	Ethernet Send Path		PK	Pink
E/A	Output/Input programmable		Bus	Interfaces-Bus A(+)/B(–)		GNYE	Green Yellow
	IO-Link		La	Emitted Light disengageable			

Brightness profile

Offset from optical axis, distance 500 mm

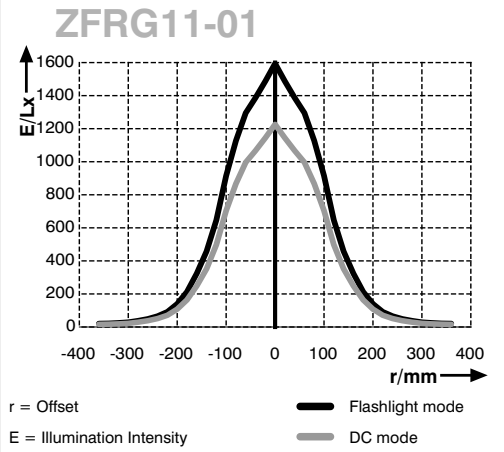

Complementary Products

Connection Cable BG2BSW1-08M
Polarizing Filter ZVP0F1101

Specifications are subject to change without notice