Floodlight

ZFFI09-01

Part Number

- **Diffuse illumination with incident light mode**
- **Especially for through-beam operating mode**
- **Flashlight mode synchronizable with image processing**

Technical Data

Optical Data	
Light Source	Infrared Light
Wave Length	850 nm
Radiance (continuous light mode)	~ 3,8 W/m²sr
Radiance (flashlight mode)	~ 12,9 W/m²sr
Electrical Data	
Supply Voltage	22...27 V DC
Current Consumption (Ub = 24 V)	< 300 mA
Temperature Range	0...50 °C
Reverse Polarity Protection	yes
Protection Class	III
Mechanical Data	
Light field length (L)	80 mm
Housing Material	Aluminum
Degree of Protection	IP42
Connection	M12 × 1; 4-pin
Connection Diagram No.	749
Connection Table No.	32
Suiting Connection Technology No.	2

The wenglor Floodlight can be used either with through-beam or incident light operating mode. Transparent and reflective objects as well as object contours are illuminated well.

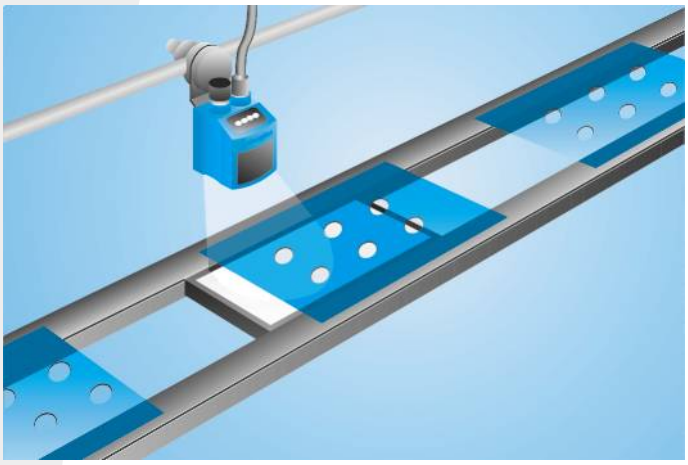

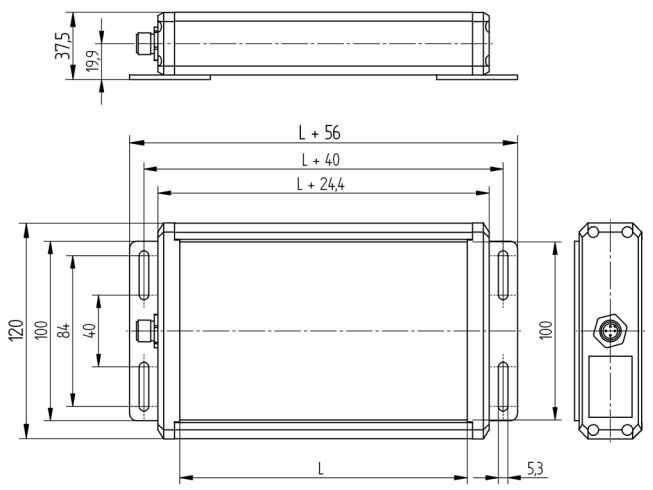

All dimensions in mm (1 mm = 0.03937 Inch)

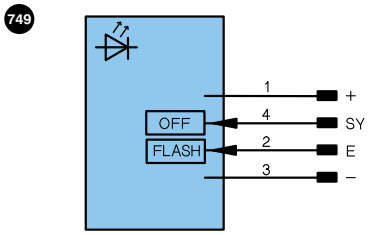

Legend

+	Supply Voltage +		U	Test Input		PoE	Power over Ethernet
–	Supply Voltage 0 V		Ū	Test Input inverted			
~	Supply Voltage (AC Voltage)		W	Trigger Input			
A	Switching Output	(NO)	O	Analog Output			
Ā	Switching Output	(NC)	O–	Ground for the Analog Output		Wire Colors according to DIN IEC 757	
V	Contamination/Error Output	(NO)	BZ	Block Discharge			
V̄	Contamination/Error Output	(NC)	AMV	Valve Output		BK	Black
E	Input (analog or digital)		a	Valve Control Output +		BN	Brown
T	Teach Input		b	Valve Control Output 0 V		RD	Red
Z	Time Delay (activation)		SY	Synchronization		OG	Orange
S	Shielding		E+	Receiver-Line		YE	Yellow
RxD	Interface Receive Path		S+	Emitter-Line		GN	Green
TxD	Interface Send Path		⏚	Grounding		BU	Blue
RDY	Ready		SnR	Switching Distance Reduction		VT	Violet
GND	Ground		Rx+/–	Ethernet Receive Path		GY	Grey
CL	Clock		Tx+/–	Ethernet Send Path		WH	White
E/A	Output/Input programmable		Bus	Interfaces-Bus A(+)/B(–)		PK	Pink
	IO-Link		La	Emitted Light disengageable		GNYE	Green Yellow

Complementary Products

Connection Cable BG2BSW1-08M
Polarizing Filter ZVP0F0901

Specifications are subject to change without notice