Reflex Sensor
for Contrast Detection

YM24PAH2ABF

LASER

Part Number

- **High Switching Frequency**
- **Small Light Spot**
- **Time Delay can be activated**

Technical Data

Optical Data	
Range	150 mm
Adjustable Range	60...150 mm
Switching Hysteresis (Lateral Approach)	< 50 µm
Light Source	Laser (red)
Wave Length	660 nm
Service Life (T = +25 °C)	100000 h
Laser Class (EN 60825-1)	2
Max. Ambient Light	10000 Lux
Light Spot Diameter	1 mm
Electrical Data	
Supply Voltage	10...30 V DC
Current Consumption (Ub = 24 V)	< 30 mA
Switching Frequency	3 kHz
Response Time	166 µs
Off-Delay	5 ms
Temperature Drift	< 5 %
Temperature Range	-10...60 °C
Switching Output Voltage Drop	< 2,5 V
PNP Switching Output/Switching Current	200 mA
Short Circuit Protection	yes
Reverse Polarity Protection	yes
Protection Class	III
Mechanical Data	
Adjustment	Potentiometer
Housing Material	Plastic
Full Encapsulation	yes
Degree of Protection	IP67
Connection	M12 × 1; 4-pin
PNP NO/NC antivalent	●
Connection Diagram No.	101
Control Panel No.	M 6
Suiting Connection Technology No.	2
Suiting Mounting Technology No.	360

These sensors are especially well suited for high speed recognition of contrast differences.

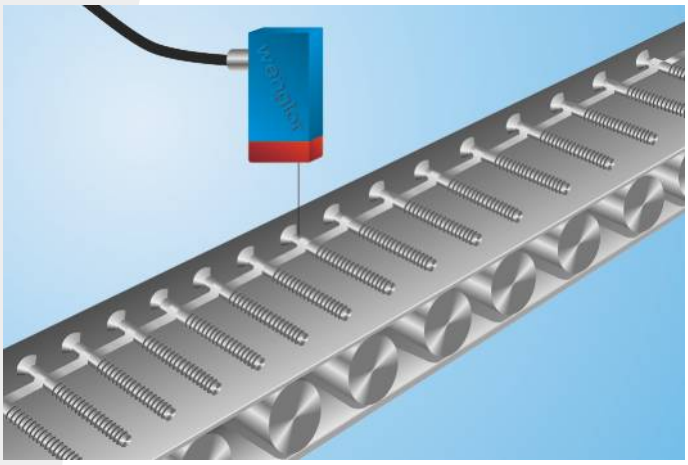

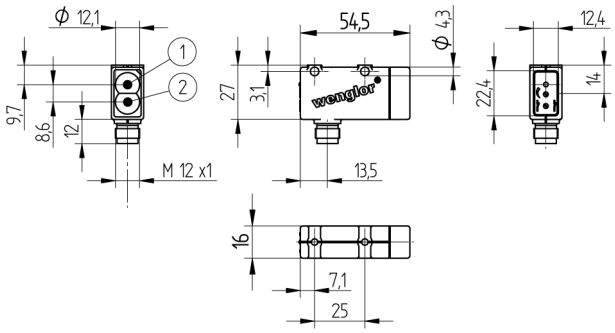

1 = Transmitter Diode
2 = Receiver Diode
All dimensions in mm (1 mm = 0.03937 Inch)

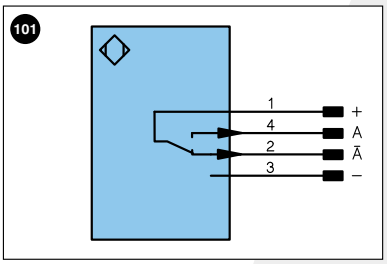

Legend

+	Supply Voltage +	
–	Supply Voltage 0 V	
~	Supply Voltage (AC Voltage)	
A	Switching Output	(NO)
Ā	Switching Output	(NC)
V	Contamination/Error Output	(NO)
V̄	Contamination/Error Output	(NC)
E	Input (analog or digital)	
T	Teach Input	
Z	Time Delay (activation)	
S	Shielding	
RxD	Interface Receive Path	
TxD	Interface Send Path	
RDY	Ready	
GND	Ground	
CL	Clock	
E/A	Output/Input programmable	
	IO-Link	

U	Test Input
Ū	Test Input inverted
W	Trigger Input
O	Analog Output
O–	Ground for the Analog Output
BZ	Block Discharge
AMV	Valve Output
a	Valve Control Output +
b	Valve Control Output 0 V
SY	Synchronization
E+	Receiver-Line
S+	Emitter-Line
⏚	Grounding
SnR	Switching Distance Reduction
Rx+/–	Ethernet Receive Path
Tx+/–	Ethernet Send Path
Bus	Interfaces-Bus A(+)/B(–)
La	Emitted Light disengageable

PoE	Power over Ethernet

Wire Colors according to DIN IEC 757

BK	Black
BN	Brown
RD	Red
OG	Orange
YE	Yellow
GN	Green
BU	Blue
VT	Violet
GY	Grey
WH	White
PK	Pink
GNYE	Green Yellow

Complementary Products

Protection Housing Set ZSM-NN-02
Protection Housing ZSV-0x-01

Ctrl.Panel

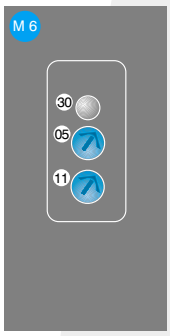

05 = Switching Distance Adjuster
11 = ON-Delay/ OFF-Delay Adjuster
30 = Switching Status/Contamination Warning

Specifications are subject to change without notice