Fork Sensor

YH03NCT8 LASER

Part Number

- **Fine Light Beam (0,6 mm) over entire width of fork**
- **Recognition of Transparent Objects**
- **Repetition Accuracy: 5 µm**
- **Teach-In**

The transmitter and the receiver are integrated into a single housing as a light barrier. If the active light beam between the transmitter and the receiver is interrupted, the output is switched accordingly.
Thanks to the use of visible laser light, the sensor is very easy to align to the object. The use of a fine light beam ensures a small diameter spot over the entire width of the fork. This allows for the recognition of extremly small parts, holes, slots and notches.

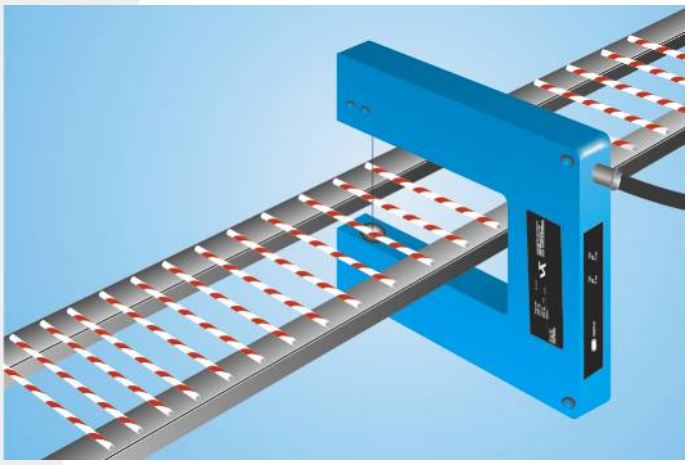

Technical Data

Optical Data	
Fork Width	30 mm
Smallest Recognizable Part	40 µm
Smallest Recognizable Slot	50 µm
Switching Hysteresis	< 20 µm
Light Source	Laser (red)
Wave Length	655 nm
Service Life (T = +25 °C)	100000 h
Laser Class (EN 60825-1)	2
Max. Ambient Light	10000 Lux
Light Spot Diameter	0,6 mm
Repeat Accuracy	< 5 µm
Electrical Data	
Supply Voltage	10...30 V DC
Current Consumption (Ub = 24 V)	< 50 mA
Switching Frequency	10 kHz
Response Time	50 µs
Off-Delay	0...100 ms
Temperature Range	-25...60 °C
Switching Output Voltage Drop	< 1,5 V
NPN Switching Output/Switching Current	200 mA
internal Load Switching Output	5100 Ohm
Short Circuit Protection	yes
Reverse Polarity Protection	yes
Overload Protection	yes
Teach Mode	NT,MT
Protection Class	III
Mechanical Data	
Housing Material	Plastic PA; Steel Plate, nickel-plated
Full Encapsulation	yes
Degree of Protection	IP67
Connection	M8 × 1; 3-pin
NPN NO/NC switchable	●
Connection Diagram No.	358
Control Panel No.	H 1
Suiting Connection Technology No.	6

ME 61 LASER CLASS 2 EN60825-1 RoHS

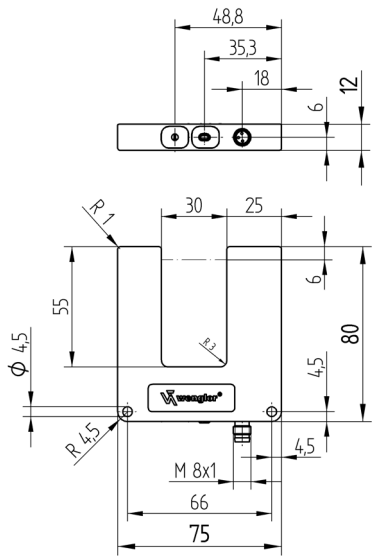

All dimensions in mm (1 mm = 0.03937 Inch)

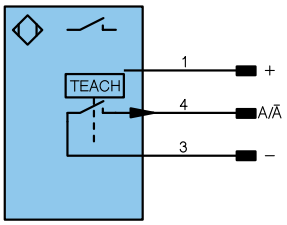

Legend

+	Supply Voltage +	
–	Supply Voltage 0 V	
~	Supply Voltage (AC Voltage)	
A	Switching Output	(NO)
Ā	Switching Output	(NC)
V	Contamination/Error Output	(NO)
V̄	Contamination/Error Output	(NC)
E	Input (analog or digital)	
T	Teach Input	
Z	Time Delay (activation)	
S	Shielding	
RxD	Interface Receive Path	
TxD	Interface Send Path	
RDY	Ready	
GND	Ground	
CL	Clock	
E/A	Output/Input programmable	
	IO-Link	

U	Test Input
Ū	Test Input inverted
W	Trigger Input
O	Analog Output
O–	Ground for the Analog Output
BZ	Block Discharge
AMV	Valve Output
a	Valve Control Output +
b	Valve Control Output 0 V
SY	Synchronization
E+	Receiver-Line
S+	Emitter-Line
⏚	Grounding
SnR	Switching Distance Reduction
Rx+/–	Ethernet Receive Path
Tx+/–	Ethernet Send Path
Bus	Interfaces-Bus A(+)/B(–)
La	Emitted Light disengageable

PoE	Power over Ethernet

Wire Colors according to DIN IEC 757

BK	Black
BN	Brown
RD	Red
OG	Orange
YE	Yellow
GN	Green
BU	Blue
VT	Violet
GY	Grey
WH	White
PK	Pink
GNYE	Green Yellow

Ctrl.Panel

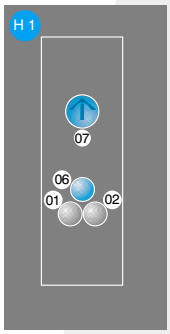

01 = Switching Status Indicator
02 = Contamination Warning
06 = Teach Button
07 = Selector Switch

Specifications are subject to change without notice