Print Mark Sensor

WP04NAT80

Part Number

- **Digital read-out of gray-scale values via the RS-232 Interface**
- **Teach-In, dynamic Teach-In, external Teach-In, RS-232 Interface**
- **Very high contrast resolution**
- **Very small spot: 1,4 × 4 mm**

These sensors have been specially designed to recognize print marks. They have a very small spot and use a white light LED with long service life. Only one sensor is required for the recognition of all color combinations, as well as the difference in brightness between print marks and the background.

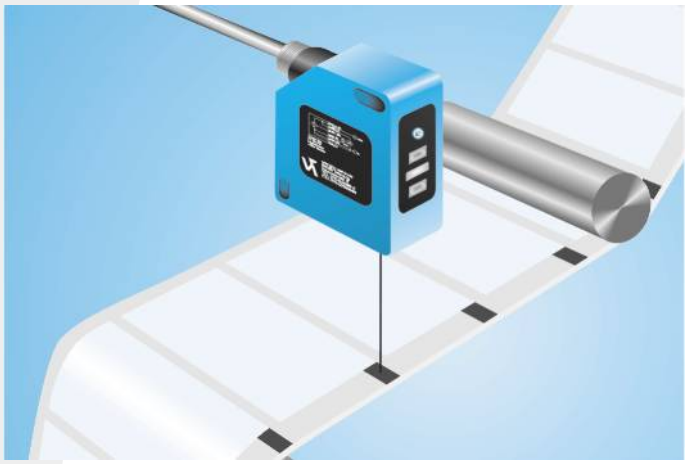

Technical Data

Optical Data	
Working Range	30...40 mm
Working Distance	35 mm
Resolution	100 Gray Scale
Switching Hysteresis	< 1 %
Light Source	White Light
Wave Length	400...700 nm
Service Life (T = +25 °C)	100000 h
Max. Ambient Light	10000 Lux
Light Spot Diameter	1,4 × 4 mm
Electrical Data	
Supply Voltage	10...30 V
Current Consumption (Ub = 24 V)	< 50 mA
Switching Frequency	25 kHz
Response Time	20 µs
On-/Off-Delay	0...100 ms
Temperature Drift	< 1 %
Temperature Range	-25...60 °C
Switching Outputs	2
Switching Output Voltage Drop	1,5 V
Switching Output / Switching Current	100 mA
Short Circuit Protection	yes
Reverse Polarity Protection	yes
Lockable	yes
Teach Mode	ZT,DT,TP
Interface	RS-232
Baud Rate	38400 Bd
Digital Inputs	2
Protection Class	III
Mechanical Data	
Adjustment	Teach-In
Housing Material	Plastic
Degree of Protection	IP67
Connection	M12 × 1; 8-pin
NPN NO/NC antivalent	●
RS-232 Interface	●
Connection Diagram No.	357
Control Panel No.	P 6
Suiting Connection Technology No.	80
Suiting Mounting Technology No.	380

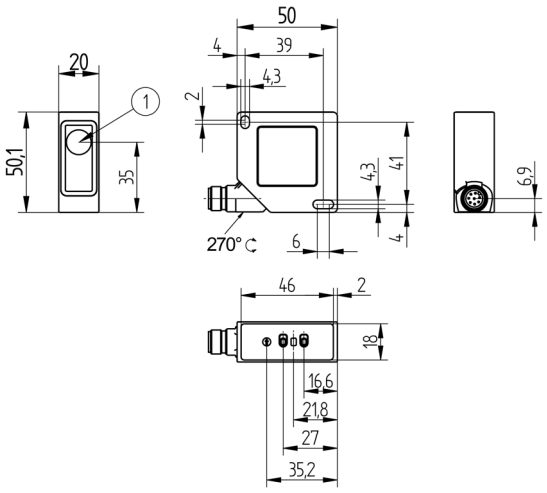

1 = optical axle
All dimensions in mm (1 mm = 0.03937 Inch)

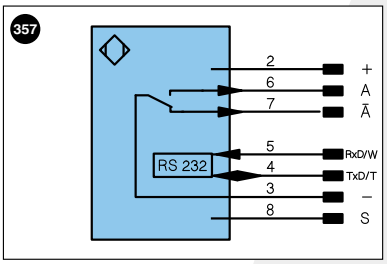

Legend

+	Supply Voltage +	
–	Supply Voltage 0 V	
~	Supply Voltage (AC Voltage)	
A	Switching Output	(NO)
Ā	Switching Output	(NC)
V	Contamination/Error Output	(NO)
V̄	Contamination/Error Output	(NC)
E	Input (analog or digital)	
T	Teach Input	
Z	Time Delay (activation)	
S	Shielding	
RxD	Interface Receive Path	
TxD	Interface Send Path	
RDY	Ready	
GND	Ground	
CL	Clock	
E/A	Output/Input programmable	
	IO-Link	

U	Test Input
Ū	Test Input inverted
W	Trigger Input
O	Analog Output
O–	Ground for the Analog Output
BZ	Block Discharge
AMV	Valve Output
a	Valve Control Output +
b	Valve Control Output 0 V
SY	Synchronization
E+	Receiver-Line
S+	Emitter-Line
⏚	Grounding
SnR	Switching Distance Reduction
Rx+/–	Ethernet Receive Path
Tx+/–	Ethernet Send Path
Bus	Interfaces-Bus A(+)/B(–)
La	Emitted Light disengageable

PoE	Power over Ethernet

Wire Colors according to DIN IEC 757

BK	Black
BN	Brown
RD	Red
OG	Orange
YE	Yellow
GN	Green
BU	Blue
VT	Violet
GY	Grey
WH	White
PK	Pink
GNYE	Green Yellow

Complementary Products

Interface Cable S232W3
Protection Housing Set ZSP-NN-02
Protection Housing ZSV-0x-01

Ctrl.Panel

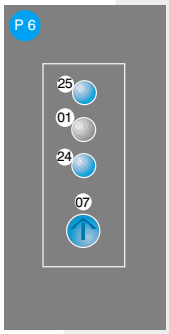

01 = Switching Status Indicator
07 = Selector Switch
24 = Plus Button
25 = Minus Button

Ideal Working Distance

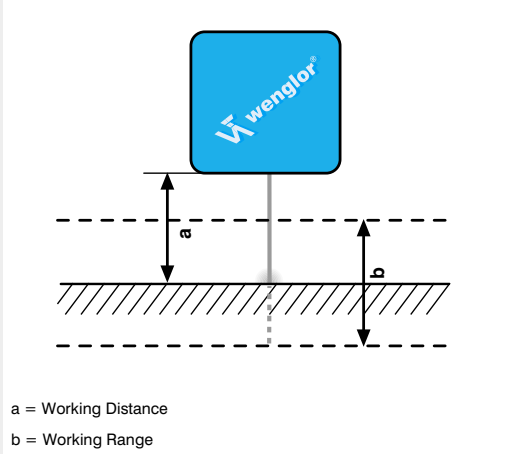

a = Working Distance
b = Working Range

Specifications are subject to change without notice