Reflex Sensor

TK55PA7

Part Number

- **Adjustable Detection Range**
- **Infrared Light**
- **Metal Plug**
- **Miniature Design**

Technical Data

Optical Data	
Range	500 mm
Switching Hysteresis	< 15 %
Light Source	Infrared Light
Service Life (T = +25 °C)	100000 h
Max. Ambient Light	10000 Lux
Opening Angle	6 °
Light Spot Diameter	see Table 1
Electrical Data	
Supply Voltage	10...30 V DC
Current Consumption (Ub = 24 V)	< 30 mA
Switching Frequency	333 Hz
Response Time	1500 µs
Temperature Drift	< 10 %
Temperature Range	-25...60 °C
Switching Output Voltage Drop	< 2,5 V
PNP Switching Output/Switching Current	100 mA
Residual Current Switching Output	< 50 µA
Short Circuit Protection	yes
Reverse Polarity Protection	yes
Overload Protection	yes
Protection Class	III
Mechanical Data	
Housing Material	Plastic
Full Encapsulation	yes
Degree of Protection	IP67
Connection	M8 × 1; 4-pin
PNP NO/NC antivalent	●
Connection Diagram No.	101
Control Panel No.	K 4
Suiting Connection Technology No.	7
Suiting Mounting Technology No.	400

The transmitter and the receiver are integrated into a single housing. The sensor evaluates transmitted light reflected back from the object. The output is switched as soon as an object passes the selected range. Bright objects reflect more light than dark objects, and can thus be recognized from greater distances.

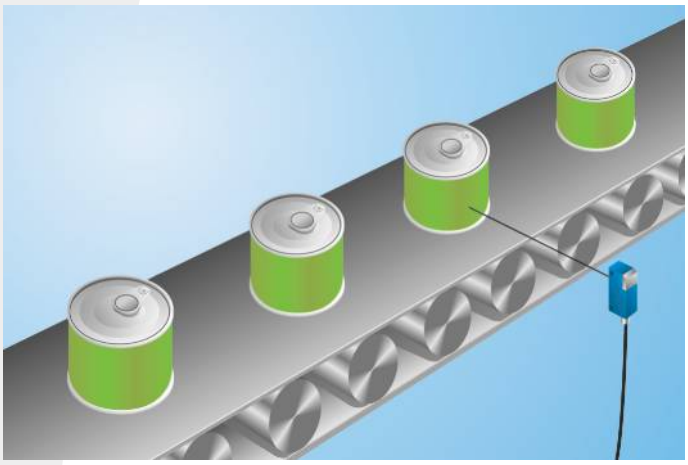

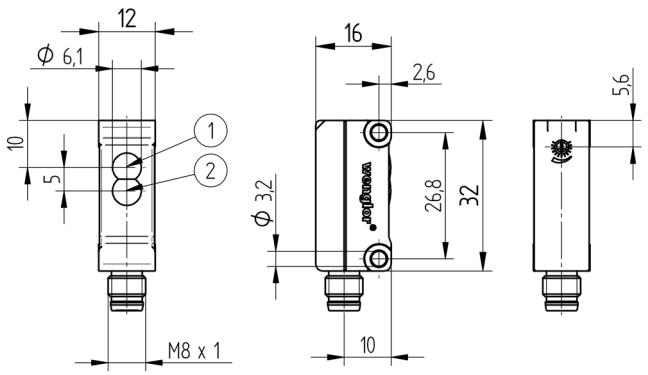

1 = Transmitter Diode
2 = Receiver Diode
All dimensions in mm (1 mm = 0.03937 Inch)

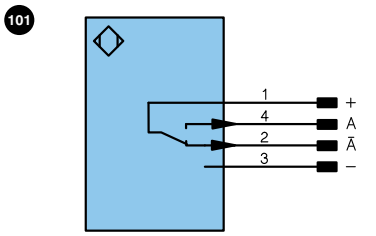

Legend

+	Supply Voltage +	U	Test Input	PoE	Power over Ethernet
–	Supply Voltage 0 V	Ū	Test Input inverted		
~	Supply Voltage (AC Voltage)	W	Trigger Input		
A	Switching Output (NO)	O	Analog Output		
Ā	Switching Output (NC)	O–	Ground for the Analog Output		Wire Colors according to DIN IEC 757
V	Contamination/Error Output (NO)	BZ	Block Discharge		
V̄	Contamination/Error Output (NC)	AMV	Valve Output	BK	Black
E	Input (analog or digital)	a	Valve Control Output +	BN	Brown
T	Teach Input	b	Valve Control Output 0 V	RD	Red
Z	Time Delay (activation)	SY	Synchronization	OG	Orange
S	Shielding	E+	Receiver-Line	YE	Yellow
RxD	Interface Receive Path	S+	Emitter-Line	GN	Green
TxD	Interface Send Path	⏚	Grounding	BU	Blue
RDY	Ready	SnR	Switching Distance Reduction	VT	Violet
GND	Ground	Rx+/–	Ethernet Receive Path	GY	Grey
CL	Clock	Tx+/–	Ethernet Send Path	WH	White
E/A	Output/Input programmable	Bus	Interfaces-Bus A(+)/B(–)	PK	Pink
	IO-Link	La	Emitted Light disengageable	GNYE	Green Yellow

Table 1

Detection Range	100 mm	300 mm	500 mm
Light Spot Diameter	12 mm	30 mm	50 mm

Ctrl.Panel

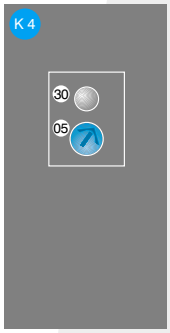

05 = Switching Distance Adjuster
30 = Switching Status/Contamination Warning

Specifications are subject to change without notice