Through Beam Sensor

SW983

Part Number

- **Special Alignment Optic**
- **Test Input**

Technical Data

Optical Data	
Range	10000 mm
Light Source	Red Light
Service Life (T = +25 °C)	100000 h
Opening Angle	6 °
Electrical Data	
Sensor Type	Emitter
Supply Voltage	10...30 V DC
Current Consumption (Ub = 24 V)	< 40 mA
Temperature Drift	< 10 %
Temperature Range	-10...60 °C
Reverse Polarity Protection	yes
Protection Class	III
Mechanical Data	
Housing Material	Stainless Steel
Full Encapsulation	yes
Degree of Protection	IP67
Connection	M12 × 1; 4-pin
Connection Diagram No.	703
Suiting Connection Technology No.	2
Suiting Mounting Technology No.	150

Suiting Receiver

EW98PC3

These through beam sensors are well suited for use in aggressive industrial environments. The sensor can be checked for correct functioning via the test input. Thanks to their large working range, the devices demonstrate excellent functional reliability in highly contaminated environments.

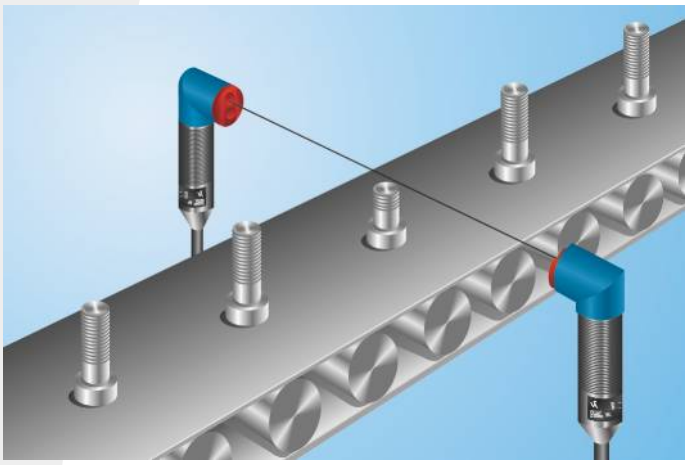

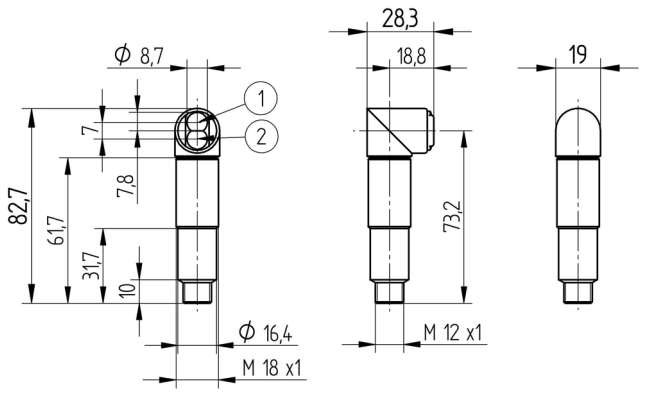

1 = no function
2 = Transmitter Diode
All dimensions in mm (1 mm = 0.03937 Inch)

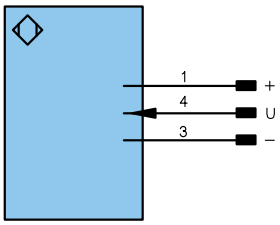

Legend

+	Supply Voltage +	U	Test Input	PoE	Power over Ethernet
–	Supply Voltage 0 V	Ū	Test Input inverted		
~	Supply Voltage (AC Voltage)	W	Trigger Input		
A	Switching Output (NO)	O	Analog Output		
Ā	Switching Output (NC)	O–	Ground for the Analog Output		
V	Contamination/Error Output (NO)	BZ	Block Discharge		
V̄	Contamination/Error Output (NC)	AMV	Valve Output		
E	Input (analog or digital)	a	Valve Control Output +		
T	Teach Input	b	Valve Control Output 0 V		
Z	Time Delay (activation)	SY	Synchronization		
S	Shielding	E+	Receiver-Line		
RxD	Interface Receive Path	S+	Emitter-Line		
TxD	Interface Send Path	⏚	Grounding		
RDY	Ready	SnR	Switching Distance Reduction		
GND	Ground	Rx+/–	Ethernet Receive Path		
CL	Clock	Tx+/–	Ethernet Send Path		
E/A	Output/Input programmable	Bus	Interfaces-Bus A(+)/B(–)		
	IO-Link	La	Emitted Light disengageable		

Wire Colors according to DIN IEC 757

BK	Black
BN	Brown
RD	Red
OG	Orange
YE	Yellow
GN	Green
BU	Blue
VT	Violet
GY	Grey
WH	White
PK	Pink
GNYE	Green Yellow

Specifications are subject to change without notice