Through Beam Sensor

SN2003

Part Number

- **Glass Lenses**
- **Test Input**

Technical Data

Optical Data	
Range	20000 mm
Light Source	Red Light
Service Life (T = +25 °C)	100000 h
Opening Angle	4 °
Electrical Data	
Sensor Type	Emitter
Supply Voltage	10...30 V DC
Current Consumption (Ub = 24 V)	< 20 mA
Temperature Drift	< 10 %
Temperature Range	-25...60 °C
Reverse Polarity Protection	yes
Protection Class	III
Mechanical Data	
Housing Material	Plastic
Full Encapsulation	yes
Degree of Protection	IP67
Connection	M12 × 1; 4-pin
Connection Diagram No.	703
Control Panel No.	K 3 No3
Suiting Connection Technology No.	2
Suiting Mounting Technology No.	350

Suiting Receiver

EN200PA3

These through beam sensors are well suited for use in aggressive industrial environments. The sensor can be checked for correct functioning via the test input. Thanks to their large working range, the devices demonstrate excellent functional reliability in highly contaminated environments.

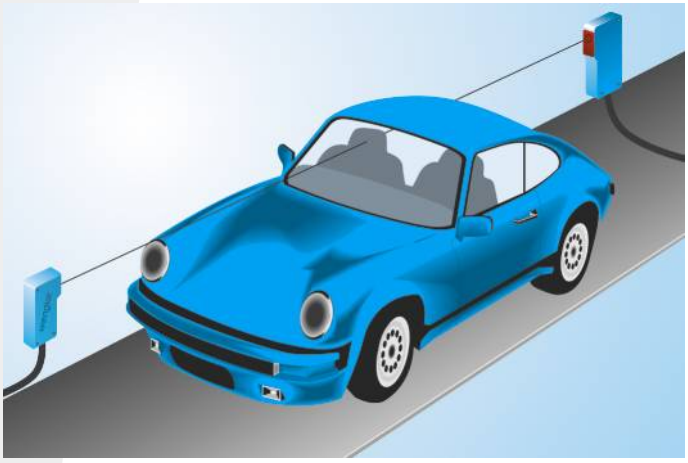

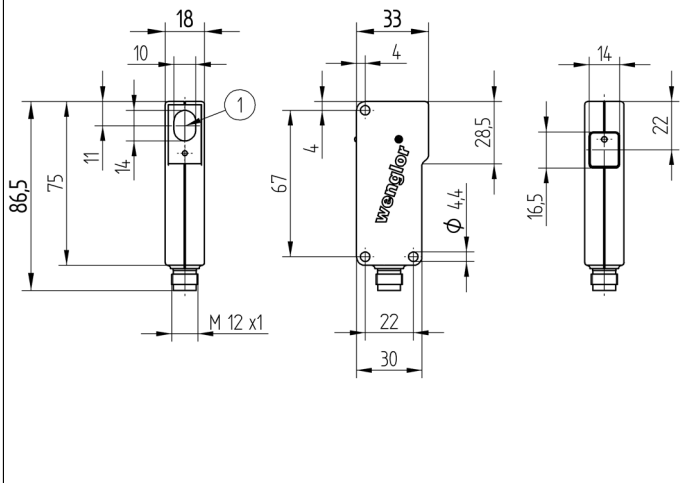

1 = Transmitter Diode
All dimensions in mm (1 mm = 0.03937 Inch)

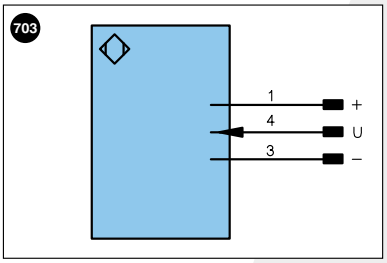

Legend

+	Supply Voltage +		U	Test Input		PoE	Power over Ethernet
–	Supply Voltage 0 V		Ū	Test Input inverted			
~	Supply Voltage (AC Voltage)		W	Trigger Input			
A	Switching Output	(NO)	O	Analog Output		Wire Colors according to DIN IEC 757	
Ā	Switching Output	(NC)	O–	Ground for the Analog Output			
V	Contamination/Error Output	(NO)	BZ	Block Discharge			
V̄	Contamination/Error Output	(NC)	AMV	Valve Output		BK	Black
E	Input (analog or digital)		a	Valve Control Output +		BN	Brown
T	Teach Input		b	Valve Control Output 0 V		RD	Red
Z	Time Delay (activation)		SY	Synchronization		OG	Orange
S	Shielding		E+	Receiver-Line		YE	Yellow
RxD	Interface Receive Path		S+	Emitter-Line		GN	Green
TxD	Interface Send Path		⏚	Grounding		BU	Blue
RDY	Ready		SnR	Switching Distance Reduction		VT	Violet
GND	Ground		Rx+/–	Ethernet Receive Path		GY	Grey
CL	Clock		Tx+/–	Ethernet Send Path		WH	White
E/A	Output/Input programmable		Bus	Interfaces-Bus A(+)/B(–)		PK	Pink
	IO-Link		La	Emitted Light disengageable		GNYE	Green Yellow

Complementary Products

Dust extraction tube STAUBTUBUS-03
Protection Housing Set ZSN-NN-02

Ctrl.Panel

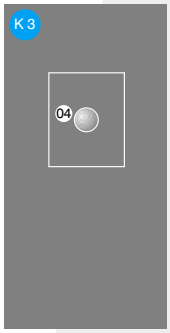

Optic

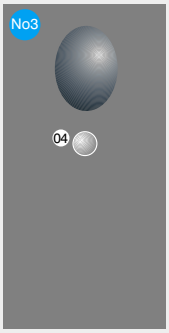

04 = Function Indicator

Specifications are subject to change without notice