Safety Light Curtain Type 4

Hand Protection

SG4-30IS075C1

Part Number

- **Completely integrated electronics**
- **Quick alignment through visible red light**

These safety light curtains are distinguished by their compact design. They are also equipped with numerous auxiliary functions, allowing for adaptation to the respective application in a highly individualized fashion. The adequate Mounting Angle BEF-SET-33 is included in the delivery.

Technical Data

Optical Data	
Range	0,5...20 m
Protection Zone Height (SFH)	780 mm
Resolution	30 mm
Light Source	Red Light
Wave Length	650 nm
Opening Angle	+/- 2,5 °
Electrical Data	
Sensor Type	Emitter
Supply Voltage	24 V DC
Current Consumption (Ub = 24 V)	100 mA
Temperature Range	-20...50 °C
Protection Class	III
Mechanical Data	
Housing Material	Aluminum
Degree of Protection	IP67
Connection	M12 × 1; 4-pin
Safety-relevant Data	
ESPE Type (EN 61496)	4
Safety Category (EN ISO 13849-1)	4
Performance Level (EN ISO 13849-1)	PL e
PFHd	3,08 × E-8 1/h
Service Life TM (EN ISO 13849-1)	20 a
Function	
Hand Protection	yes
Connection Table No.	27
Control Panel No.	S 5
Suiting Connection Technology No.	2 2a
Suiting Mounting Technology No.	700

Suiting Receiver

SG4-30IE075C1

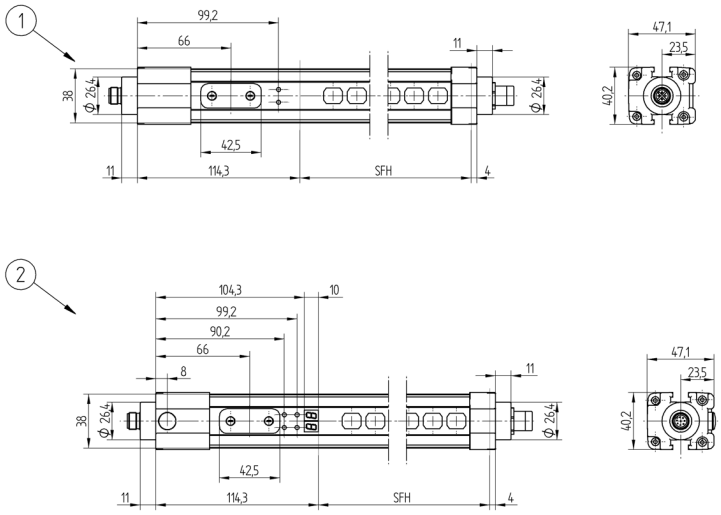

1 = Emitter
2 = Receiver
All dimensions in mm (1 mm = 0.03937 Inch)

Ctrl.Panel

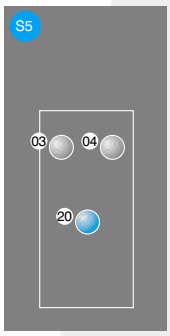

03 = Error Indicator
04 = Function Indicator
20 = Enter Button

Complementary Products

Deflection Mirror SLU790V1
Laser Alignment Aid SZ0-LAH1
Protection Column with Deflection Mirror SZ000EU125NN01
Protection Column with Screening Grid SZ000EG125NN01

Specifications are subject to change without notice