Safety Light Curtain Type 4

Hand Protection

SG4-30IE180C1

Part Number

- **Completely integrated electronics**
- **Fix blanking, floating blanking and reduced resolution, Cascading, Muting**
- **Serial interface**

These safety light curtains are distinguished by their compact design. They are also equipped with numerous auxiliary functions, allowing for adaptation to the respective application in a highly individualized fashion. The adequate Mounting Angle BEF-SET-33 is included in the delivery.

Technical Data

Optical Data	
Range	0,5...20 m
Protection Zone Height (SFH)	1830 mm
Resolution	30 mm
Light Source	Red Light
Opening Angle	+/- 2,5 °
Electrical Data	
Sensor Type	Receiver
Supply Voltage	24 V DC
Current Consumption (Ub = 24 V)	300 mA
Response Time	27 ms
Temperature Range	-20...50 °C
Signal Outputs	1
Signal Output Voltage Drop	< 2,5 V
Signal Output/Switching Current	200 mA
No. Safety Outputs	2
Safety Output Voltage Drop	< 2,5 V
PNP Safety Output/Switching Current	300 mA
Short Circuit Protection	yes
Reverse Polarity Protection	yes
Overload Protection	yes
Interface	RS-485
Protection Class	III
Mechanical Data	
Housing Material	Aluminum
Degree of Protection	IP67
Connection	M12 × 1; 8-pin
Safety-relevant Data	
ESPE Type (EN 61496)	4
Safety Category (EN ISO 13849-1)	4
Performance Level (EN ISO 13849-1)	PL e
PFHd	3,08 × E-8 1/h
Service Life TM (EN ISO 13849-1)	20 a
Function	
Hand Protection	yes
Restart Inhibit	yes
Contactor Monitoring	yes
Cascading	yes
Fix Blanking	yes
Floating Blanking	yes
Reduced Resolution	yes
Serial Communication	yes
Connection Table No.	28
Control Panel No.	S 4
Suiting Connection Technology No.	88 88s
Suiting Mounting Technology No.	700
Suitable Serial Interface Plug No.	11

Suiting Emitter

SG4-30IS180C1

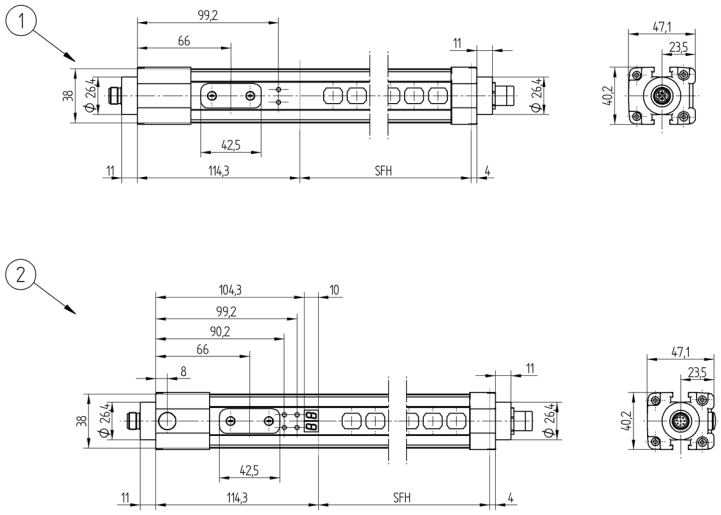

1 = Emitter
2 = Receiver
All dimensions in mm (1 mm = 0.03937 Inch)

Ctrl.Panel

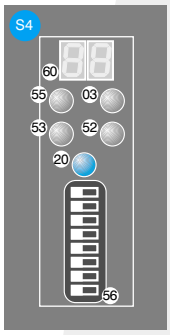

03 = Error Indicator
20 = Enter Button
52 = OSSD ON
53 = OSSD OFF
55 = Blanking
56 = Dip-Switch
60 = Display

Complementary Products

Deflection Mirror SLU1870V1
Muting Indicator SM0-00CA000C1
Protection Column with Deflection Mirror SZ000EU215NN01
Protection Column with Screening Grid SZ000EG215NN01
Relay Unit Type 2/Type 4 SG4-00VA000R2
Software wsafe

Specifications are subject to change without notice