Transit Time Sensor
for Measuring Tasks

OY1P303P0189 LASER

Part Number

- **Analog Output (0...10 V/4...20 mA)**
- **graphical display for easy operation**
- **reliable in case of glossy objects with WinTec**
- **Secure Detection of black objects also in extremely inclined positions with WinTec**
- **Two mutually independent switching outputs**

These sensors have scratch-resistant optics and the emitted light can be switched off. They use the transit time measurement principle to measure the distance between the sensor and the object.
wenglor interference-free technology (WinTec) has revolutionized sensor technology: it makes it possible to mount several sensors directly next to, or opposite each other without the sensors influencing each other. The sensors reach a very high switching frequency and use Laser Class 1, which is safe for the human eye.

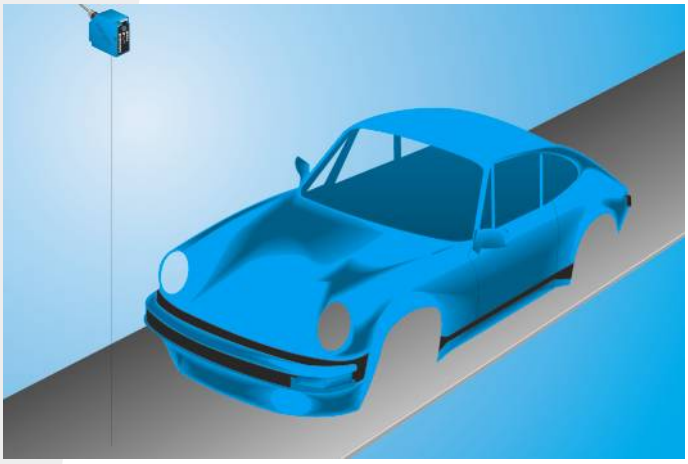

Technical Data

Optical Data	
Working Range	50...3050 mm
Measuring Range	3000 mm
Reproducibility maximum	1 mm
Linearity Deviation (200...3050 mm)	7 mm
Linearity Deviation (50...200 mm)	15 mm
Switching Hysteresis	3...20 mm
Light Source	Laser (red)
Wave Length	660 nm
Service Life (T = +25 °C)	100000 h
Laser Class (EN 60825-1)	1
Max. Ambient Light	10000 Lux
Beam Divergence	< 2 mrad
Electrical Data	
Supply Voltage	18...30 V DC
Current Consumption (Ub = 24 V)	< 70 mA
Switching Frequency	250 Hz
Measurement Rate	1...500 /s
On-/Off-Delay	0...10000 ms
Temperature Drift (Tu > -10 °C)	< 0,2 mm/K
Temperature Drift (Tu < -10 °C)	< 0,4 mm/K
Temperature Range	-40...50 °C
Switching Outputs	2
Switching Output Voltage Drop	< 2,5 V
Switching Output / Switching Current	100 mA
Analog Output	0...10 V / 4...20 mA
Short Circuit Protection	yes
Reverse Polarity and Overload Protection	yes
Teach Mode	HT,VT,FT,TP
Interface	RS-232
Protection Class	III
Mechanical Data	
Adjustment	Teach-In
Housing Material	Plastic
Optic Cover	PMMA
Degree of Protection	IP68
Connection	M12 × 1; 8-pin
Error Output	●
Contamination Output	●
Configurable as PNP/NPN/Push-Pull	●
Analog Output	●
RS-232 Interface	●
Connection Diagram No.	531
Control Panel No.	X 2
Suiting Connection Technology No.	89
Suiting Mounting Technology No.	380

ME 61

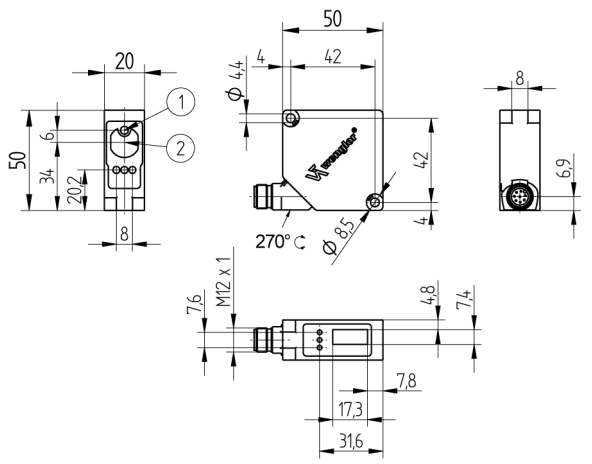

1 = Transmitter Diode
2 = Receiver Diode
All dimensions in mm (1 mm = 0.03937 Inch)

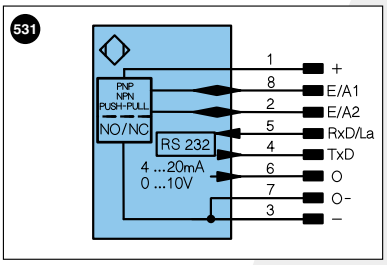

Legend

+	Supply Voltage +	U	Test Input	PoE	Power over Ethernet
–	Supply Voltage 0 V	Ū	Test Input inverted		
~	Supply Voltage (AC Voltage)	W	Trigger Input		
A	Switching Output (NO)	O	Analog Output		
Ā	Switching Output (NC)	O–	Ground for the Analog Output		Wire Colors according to DIN IEC 757
V	Contamination/Error Output (NO)	BZ	Block Discharge		
V̄	Contamination/Error Output (NC)	AMV	Valve Output	BK	Black
E	Input (analog or digital)	a	Valve Control Output +	BN	Brown
T	Teach Input	b	Valve Control Output 0 V	RD	Red
Z	Time Delay (activation)	SY	Synchronization	OG	Orange
S	Shielding	E+	Receiver-Line	YE	Yellow
RxD	Interface Receive Path	S+	Emitter-Line	GN	Green
TxD	Interface Send Path	⏚	Grounding	BU	Blue
RDY	Ready	SnR	Switching Distance Reduction	VT	Violet
GND	Ground	Rx+/–	Ethernet Receive Path	GY	Grey
CL	Clock	Tx+/–	Ethernet Send Path	WH	White
E/A	Output/Input programmable	Bus	Interfaces-Bus A(+)/B(–)	PK	Pink
	IO-Link	La	Emitted Light disengageable	GNYE	Green Yellow

Table 1

Working Distance	0 m	3 m
Light Spot Diameter	5 mm	9 mm

Complementary Products

- Interface Cable S232W3
- Protection Housing Set ZSP-NN-02
- Protection Housing ZSV-0x-01

Ctrl.Panel

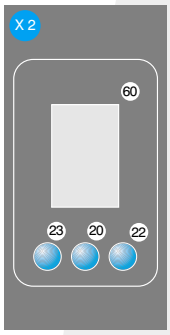

20 = Enter Button
22 = UP Button
23 = Down Button
60 = Display

Switching Distance Deviation

Typical characteristic curve based on Kodak white, 90 %

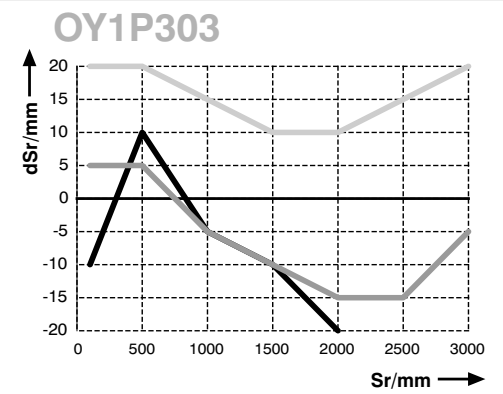

Specifications are subject to change without notice