Reflex Sensor

OTWK502A0002

Part Number

- **Adjustable Detection Range**
- **Clever Inclusive Mounting Technology**
- **Large Detection Range**
- **Minimal installation space**
- **Simple installation**

Technical Data

Optical Data	
Range	500 mm
Switching Hysteresis	< 15 %
Light Source	Infrared Light
Service Life (T = +25 °C)	100000 h
Max. Ambient Light	10000 Lux
Opening Angle	5 °
Light Spot Diameter	see Table 1
Electrical Data	
Supply Voltage	10...30 V DC
Current Consumption (Ub = 24 V)	< 25 mA
Switching Frequency	500 Hz
Response Time	1 ms
Temperature Drift	< 10 %
Temperature Range	-25...60 °C
Switching Output Voltage Drop	< 2,5 V
PNP Switching Output/Switching Current	200 mA
Residual Current Switching Output	< 50 µA
Short Circuit Protection	yes
Reverse Polarity Protection	yes
Overload Protection	yes
Protection Class	III
Mechanical Data	
Adjustment	Potentiometer
Housing Material	Plastic
Degree of Protection	IP67
Connection	M12 × 1; 4-pin
PNP NO/NC antivalent	●
Connection Diagram No.	101
Control Panel No.	DK1
Suiting Connection Technology No.	2
Suiting Mounting Technology No.	150 160

The transmitter and the receiver are integrated into a single housing. The sensor evaluates transmitted light reflected back from the object. The output is switched as soon as an object passes the selected range. Bright objects reflect more light than dark objects, and can thus be recognized from greater distances.

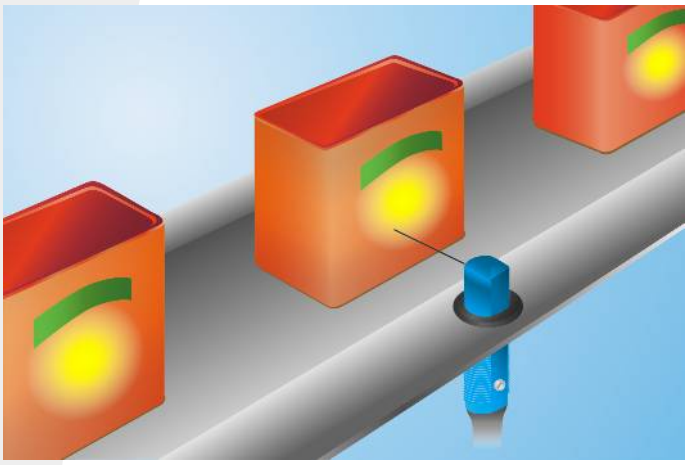

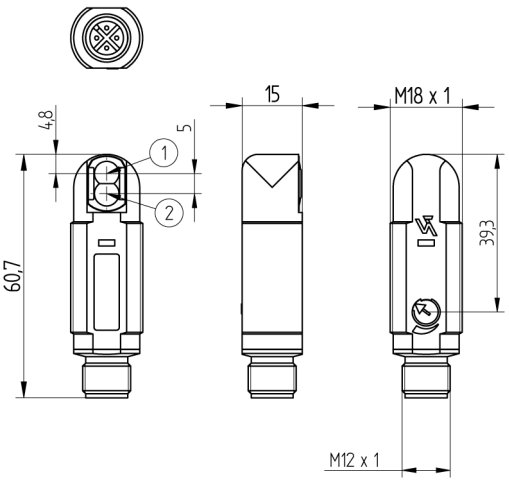

1 = Transmitter Diode
2 = Receiver Diode
All dimensions in mm (1 mm = 0.03937 Inch)

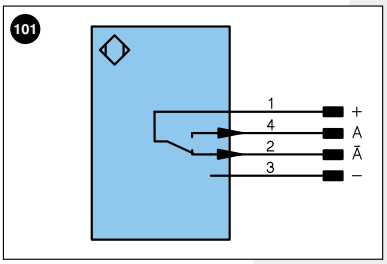

Legend

+	Supply Voltage +		U	Test Input		PoE	Power over Ethernet
–	Supply Voltage 0 V		Ū	Test Input inverted			
~	Supply Voltage (AC Voltage)		W	Trigger Input			
A	Switching Output	(NO)	O	Analog Output			Wire Colors according to DIN IEC 757
Ā	Switching Output	(NC)	O–	Ground for the Analog Output			
V	Contamination/Error Output	(NO)	BZ	Block Discharge			
V̄	Contamination/Error Output	(NC)	AMV	Valve Output		BK	Black
E	Input (analog or digital)		a	Valve Control Output +		BN	Brown
T	Teach Input		b	Valve Control Output 0 V		RD	Red
Z	Time Delay (activation)		SY	Synchronization		OG	Orange
S	Shielding		E+	Receiver-Line		YE	Yellow
RxD	Interface Receive Path		S+	Emitter-Line		GN	Green
TxD	Interface Send Path		⏚	Grounding		BU	Blue
RDY	Ready		SnR	Switching Distance Reduction		VT	Violet
GND	Ground		Rx+/–	Ethernet Receive Path		GY	Grey
CL	Clock		Tx+/–	Ethernet Send Path		WH	White
E/A	Output/Input programmable		Bus	Interfaces-Bus A(+)/B(–)		PK	Pink
	IO-Link		La	Emitted Light disengageable		GNYE	Green Yellow

Table 1

Detection Range	100 mm	300 mm	500 mm
Light Spot Diameter	11 mm	26 mm	41 mm

Ctrl.Panel

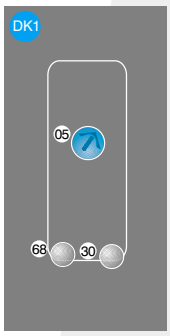

05 = Switching Distance Adjuster
30 = Switching Status/Contamination Warning
68 = Supply Voltage Indicator

Specifications are subject to change without notice