Retro-Reflex Sensor

OLDK503A0002

Part Number

- **Clever Inclusive Mounting Technology**
- **Glossy objects can be detected**
- **Minimal installation space**
- **Simple installation**
- **Switching Distance Adjuster**

A reflector must be used in combination with these sensors. They can be installed in all kinds of industrial environments thanks to ample functional reserve. Even reflective objects can be reliably recognized through the use of polarized light.

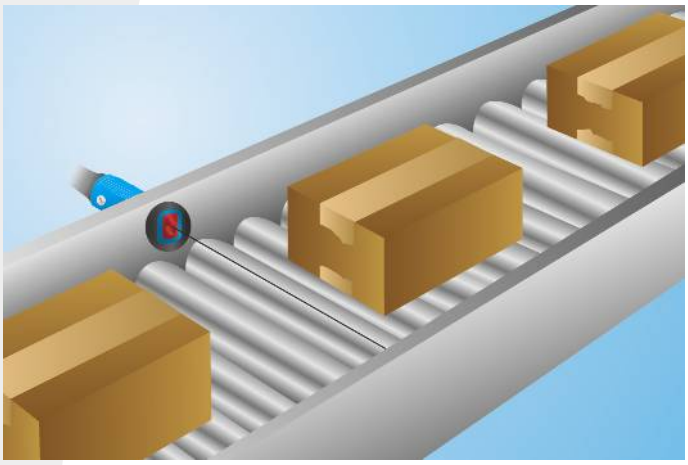

Technical Data

Optical Data	
Range	5000 mm
Reference Reflector/Reflex Foil	RQ100BA
Switching Hysteresis	< 15 %
Light Source	Red Light
Polarization Filter	yes
Service Life (T = +25 °C)	100000 h
Max. Ambient Light	10000 Lux
Opening Angle	5 °
Light Spot Diameter	see Table 1
Two-Lens Optic	yes
Electrical Data	
Supply Voltage	10...30 V DC
Current Consumption (Ub = 24 V)	< 20 mA
Switching Frequency	700 Hz
Response Time	714 µs
Temperature Drift	< 10 %
Temperature Range	-25...60 °C
Switching Output Voltage Drop	< 2,5 V
PNP Switching Output/Switching Current	200 mA
Residual Current Switching Output	< 50 µA
Short Circuit Protection	yes
Reverse Polarity Protection	yes
Overload Protection	yes
Protection Class	III
Mechanical Data	
Adjustment	Potentiometer
Housing Material	Plastic
Degree of Protection	IP67
Connection	M12 × 1; 4-pin
PNP NO/NC antivalent	●
Connection Diagram No.	101
Control Panel No.	DK1
Suiting Connection Technology No.	2
Suiting Mounting Technology No.	150 160

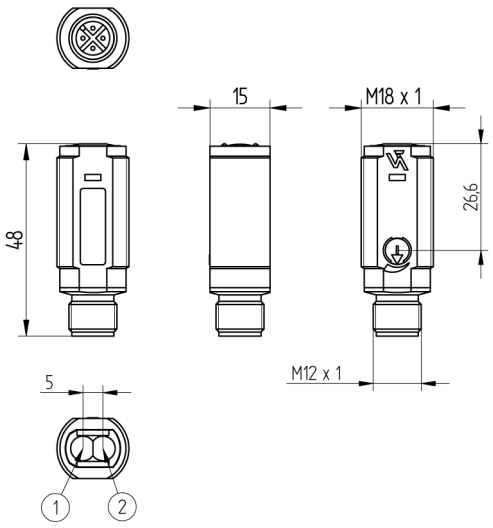

1 = Transmitter Diode
2 = Receiver Diode
All dimensions in mm (1 mm = 0.03937 Inch)

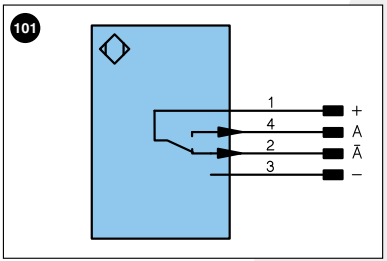

Legend

+	Supply Voltage +	U	Test Input	PoE	Power over Ethernet
–	Supply Voltage 0 V	Ū	Test Input inverted		
~	Supply Voltage (AC Voltage)	W	Trigger Input		
A	Switching Output (NO)	O	Analog Output		
Ā	Switching Output (NC)	O–	Ground for the Analog Output		Wire Colors according to DIN IEC 757
V	Contamination/Error Output (NO)	BZ	Block Discharge		
V̄	Contamination/Error Output (NC)	AMV	Valve Output	BK	Black
E	Input (analog or digital)	a	Valve Control Output +	BN	Brown
T	Teach Input	b	Valve Control Output 0 V	RD	Red
Z	Time Delay (activation)	SY	Synchronization	OG	Orange
S	Shielding	E+	Receiver-Line	YE	Yellow
RxD	Interface Receive Path	S+	Emitter-Line	GN	Green
TxD	Interface Send Path	⏚	Grounding	BU	Blue
RDY	Ready	SnR	Switching Distance Reduction	VT	Violet
GND	Ground	Rx+/–	Ethernet Receive Path	GY	Grey
CL	Clock	Tx+/–	Ethernet Send Path	WH	White
E/A	Output/Input programmable	Bus	Interfaces-Bus A(+)/B(–)	PK	Pink
	IO-Link	La	Emitted Light disengageable	GNYE	Green Yellow

Table 1

Working Distance	0,2 m	0,5 m	5 m
Light Spot Diameter	17 mm	35 mm	330 mm

Complementary Products

Dust extraction tube STAUBTUBUS-01
Reflector, Reflex Foil

Ctrl.Panel

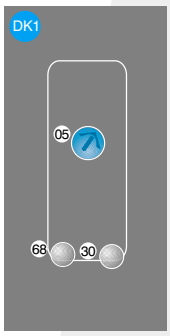

05 = Switching Distance Adjuster
30 = Switching Status/Contamination Warning
68 = Supply Voltage Indicator

Feasible reflector distance

Reflector type, mounting distance

RQ100BA	0,01...5 m	RR21_M	0,01...1,1 m
RE18040BA	0,01...4,5 m	ZRAE02B01	0,01...2,2 m
RQ84BA	0,01...4,5 m	ZRDS01R01	0,05...0,8 m
RR84BA	0,01...4,5 m	ZRME01B01	0,01...0,5 m
RE9538BA	0,01...2,2 m	ZRME03B01	0,01...2,5 m
RE6151BM	0,01...4,3 m	ZRMR02K01	0,01...0,7 m
RR50_A	0,01...3,5 m	ZRMS02_01	0,01...1 m
RE6040BA	0,01...4 m	RF505	0,05...1,5 m
RE8222BA	0,01...2,6 m	RF508	0,05...1,5 m
RR34_M	0,01...2,5 m	RF258	0,05...1,1 m
RE3220BM	0,01...1,5 m	ZRAF07K01	0,05...1,1 m
RE6210BM	0,01...1 m	ZRAF08K01	0,05...1,5 m
RR25_M	0,01...1,3 m	ZRDF03K01	0,04...3,4 m
RR25KP	0,04...0,8 m	ZRDF10K01	0,04...4,5 m

Specifications are subject to change without notice