Reflex Sensor
with Background Suppression

OHN252B0003

Part Number

LASER

- **Special Coated Optic**
- **Stainless Steel Plug (V2A)**
- **Switching Frequency: 600 Hz**

Technical Data

Optical Data	
Range	250 mm
Adjustable Range	65...250 mm
Switching Hysteresis	< 1 %
Light Source	Laser (red)
Wave Length	655 nm
Service Life (T = +25 °C)	100000 h
Laser Class (EN 60825-1)	1
Max. Ambient Light	10000 Lux
Light Spot Diameter	see Table 1
Electrical Data	
Supply Voltage	10...30 V DC
Current Consumption (Ub = 24 V)	< 20 mA
Switching Frequency	600 Hz
Response Time	833 µs
Temperature Drift	< 2 %
Temperature Range	-25...60 °C
Switching Output Voltage Drop	< 2,5 V
PNP Switching Output/Switching Current	200 mA
Contamination Output Voltage Drop	< 2,5 V
PNP Contamination Output/Switching Current	50 mA
Short Circuit Protection	yes
Reverse Polarity Protection	yes
Overload Protection	yes
Protection Class	III
Mechanical Data	
Housing Material	Plastic
Coated Optic	yes
Degree of Protection	IP67
Connection	M12 × 1; 4-pin
Contamination Output	●
PNP NO	●
Connection Diagram No.	103
Control Panel No.	N 3
Suiting Connection Technology No.	2
Suiting Mounting Technology No.	350

These sensors are particularly well suited for recognizing objects in front of any type of background. The color, shape and surface characteristics of the object have practically no influence on sensor switching performance.

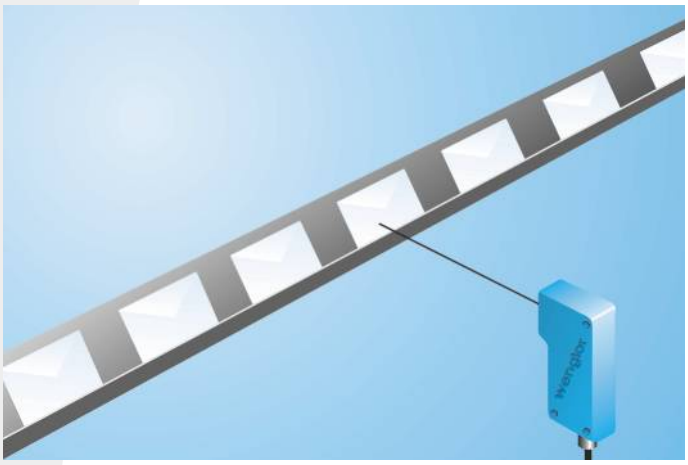

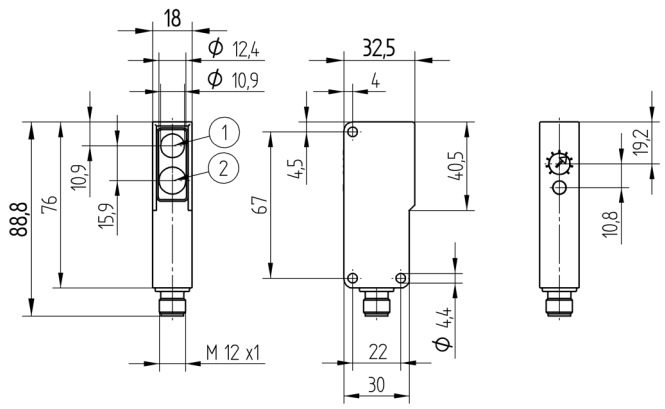

1 = Transmitter Diode
2 = Receiver Diode
All dimensions in mm (1 mm = 0.03937 Inch)

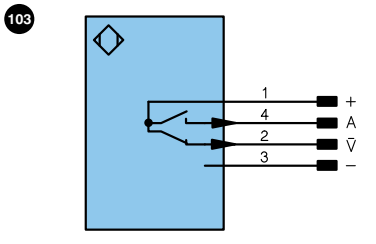

Legend

+	Supply Voltage +	U	Test Input	PoE	Power over Ethernet
–	Supply Voltage 0 V	Ū	Test Input inverted		
~	Supply Voltage (AC Voltage)	W	Trigger Input		
A	Switching Output (NO)	O	Analog Output		Wire Colors according to DIN IEC 757
Ā	Switching Output (NC)	O–	Ground for the Analog Output		
V	Contamination/Error Output (NO)	BZ	Block Discharge		
V̄	Contamination/Error Output (NC)	AMV	Valve Output	BK	Black
E	Input (analog or digital)	a	Valve Control Output +	BN	Brown
T	Teach Input	b	Valve Control Output 0 V	RD	Red
Z	Time Delay (activation)	SY	Synchronization	OG	Orange
S	Shielding	E+	Receiver-Line	YE	Yellow
RxD	Interface Receive Path	S+	Emitter-Line	GN	Green
TxD	Interface Send Path	⏚	Grounding	BU	Blue
RDY	Ready	SnR	Switching Distance Reduction	VT	Violet
GND	Ground	Rx+/–	Ethernet Receive Path	GY	Grey
CL	Clock	Tx+/–	Ethernet Send Path	WH	White
E/A	Output/Input programmable	Bus	Interfaces-Bus A(+)/B(–)	PK	Pink
	IO-Link	La	Emitted Light disengageable	GNYE	Green Yellow

Table 1

Detection Range	60 mm	125 mm	250 mm
Light Spot Diameter	3 mm	2,5 mm	2,5 mm

Complementary Products

Dust extraction tube STAUBTUBUS-03
Protection Housing Set ZSN-NN-02

Ctrl.Panel

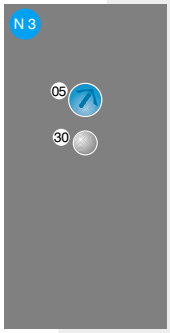

05 = Switching Distance Adjuster
30 = Switching Status/Contamination Warning

Switching Distance Deviation

Typical characteristic curve based on Kodak white, 90 %

Sr = Switching Distance — black 6 %
dSr = Switching Distance Change — grey 18 %

Specifications are subject to change without notice