Light Curtain
for Measuring Tasks

OEEI501U0135

Part Number

- **graphical display for easy operation**
- **integrated evaluation unit**
- **object detection and measurement**
- **Recognition of small parts**

These Light Curtains for Measurement Tasks are equipped with an integrated evaluation unit, thus external connection units are not needed. Object detection via the digital output, as well as object measurement via the analog output can be made. The OLED display enables an easy menu-driven configuration and facilitates alignment and setup. Via the IO-Link interface a comfortable parametrization and quick diagnosis is possible. The adequate Mounting Angle BEF-SET-33 is included in the delivery.

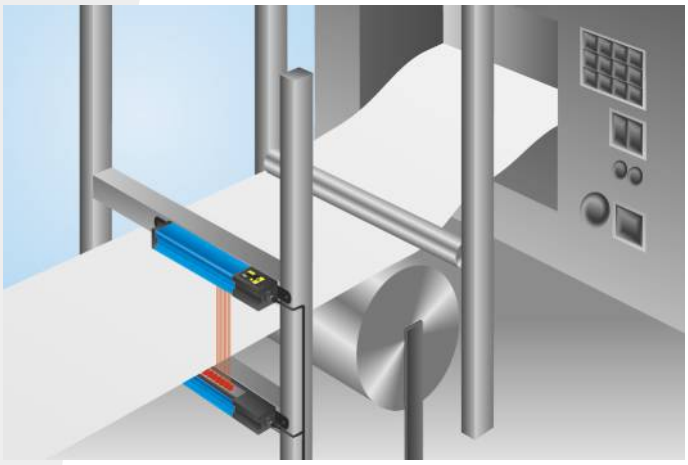

Technical Data

Optical Data	
Range	2000 mm
Measurement Field Height (MFH)	50 mm
Beam Distance	2 mm
Light Source	Infrared Light
Service Life (T = +25 °C)	100000 h
Max. Ambient Light	10000 Lux
Opening Angle	10 °
Electrical Data	
Sensor Type	Receiver
Supply Voltage	18...30 V DC
Current Consumption (Ub = 24 V)	< 60 mA
Switching Frequency	150 Hz
Response Time	3 ms
On-/Off-Delay	0...10 s
Temperature Drift	< 10 %
Temperature Range	-25...60 °C
Switching Outputs	2
Switching Output Voltage Drop	< 2,5 V
Switching Output / Switching Current	100 mA
Residual Current Switching Output	< 50 µA
Analog Output	0...10 V / 4...20 mA
Short Circuit and Overload Protection	yes
Reverse Polarity Protection	yes
Lockable	yes
Interface	IO-Link
IO-Link Version	1.0
Protection Class	III
Mechanical Data	
Adjustment	Menu (OLED)
Housing Material	Aluminum
Degree of Protection	IP65
Connection	M12 × 1; 4/5-pin
NO/NC switchable	●
Configurable as PNP/Push-Pull	●
Error Output	●
IO-Link	●
Connection Diagram No.	188
Control Panel No.	X 2
Suiting Connection Technology No.	2 35
Suiting Mounting Technology No.	700

Suiting Emitter

OSEI501Z0103

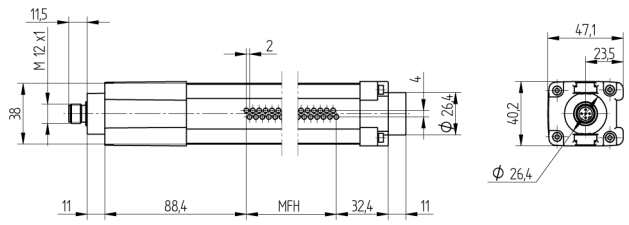

All dimensions in mm (1 mm = 0.03937 Inch)

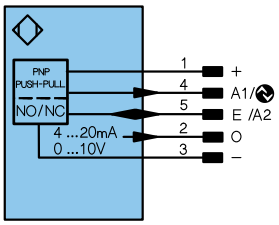

Legend

+	Supply Voltage +	U	Test Input	PoE	Power over Ethernet
–	Supply Voltage 0 V	Ū	Test Input inverted		
~	Supply Voltage (AC Voltage)	W	Trigger Input		
A	Switching Output (NO)	O	Analog Output		
Ā	Switching Output (NC)	O–	Ground for the Analog Output		
V	Contamination/Error Output (NO)	BZ	Block Discharge		
V̄	Contamination/Error Output (NC)	AMV	Valve Output		
E	Input (analog or digital)	a	Valve Control Output +		
T	Teach Input	b	Valve Control Output 0 V		
Z	Time Delay (activation)	SY	Synchronization		
S	Shielding	E+	Receiver-Line		
RxD	Interface Receive Path	S+	Emitter-Line		
TxD	Interface Send Path	⏚	Grounding		
RDY	Ready	SnR	Switching Distance Reduction		
GND	Ground	Rx+/–	Ethernet Receive Path		
CL	Clock	Tx+/–	Ethernet Send Path		
E/A	Output/Input programmable	Bus	Interfaces-Bus A(+)/B(–)		
	IO-Link	La	Emitted Light disengageable		

Wire Colors according to DIN IEC 757

BK	Black
BN	Brown
RD	Red
OG	Orange
YE	Yellow
GN	Green
BU	Blue
VT	Violet
GY	Grey
WH	White
PK	Pink
GNYE	Green Yellow

Complementary Products

IO-Link Master

Ctrl.Panel

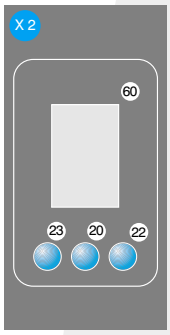

20 = Enter Button
22 = UP Button
23 = Down Button
60 = Display

Specifications are subject to change without notice