# Retro-Reflex Sensor
## for Clear Glass Recognition

# KN88NA3
Part Number

- **Foil detection**
- **Recognition of Clear Glass**
- **Recognition of PET bottles**

## Technical Data

| | |
|---|---|
| **Optical Data** | |
| Range | 2600 mm |
| Reference Reflector/Reflex Foil | RQ100BA |
| Clear Glass Recognition | yes |
| Switching Hysteresis | < 5 % |
| Light Source | Red Light |
| Polarization Filter | yes |
| Service Life (T = +25 °C) | 100000 h |
| Max. Ambient Light | 10000 Lux |
| Opening Angle | 3 ° |
| Single-Lens Optic | yes |
| **Electrical Data** | |
| Supply Voltage | 10...30 V DC |
| Current Consumption (Ub = 24 V) | < 40 mA |
| Switching Frequency | 2500 Hz |
| Response Time | 200 µs |
| Temperature Drift | < 3 % |
| Temperature Range | -10...60 °C |
| Switching Output Voltage Drop | < 2,5 V |
| NPN Switching Output/Switching Current | 100 mA |
| Residual Current Switching Output | < 50 µA |
| Short Circuit Protection | yes |
| Reverse Polarity Protection | yes |
| Overload Protection | yes |
| Protection Class | III |
| **Mechanical Data** | |
| Housing Material | Plastic |
| Full Encapsulation | yes |
| Degree of Protection | IP67 |
| Connection | M12 × 1; 4-pin |
| NPN NO/NC antivalent | ● |
| Connection Diagram No. | 301 |
| Control Panel No. | N 1 No1 |
| Suiting Connection Technology No. | 2 |
| Suiting Mounting Technology No. | 350 |

A reflector must be used in combination with these sensors. wenglor has the right retro-reflex light barrier for every application. Even crystal-clear objects and sheet products can be reliably recognized.

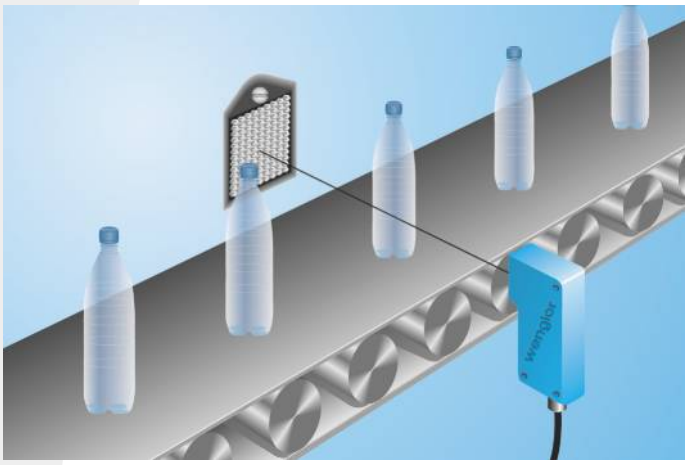


ME 61

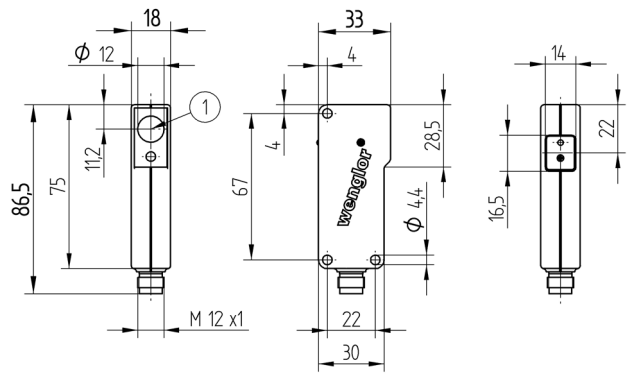


1 = optical axle
All dimensions in mm (1 mm = 0.03937 Inch)

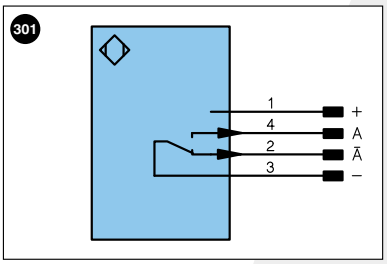


Legend

| | | | | | |
|---|---|---|---|---|---|
| + | Supply Voltage + | U | Test Input | PoE | Power over Ethernet |
| – | Supply Voltage 0 V | Ū | Test Input inverted | | |
| ~ | Supply Voltage (AC Voltage) | W | Trigger Input | | |
| A | Switching Output (NO) | O | Analog Output | | |
| Ā | Switching Output (NC) | O– | Ground for the Analog Output | | Wire Colors according to DIN IEC 757 |
| V | Contamination/Error Output (NO) | BZ | Block Discharge | | |
| V̄ | Contamination/Error Output (NC) | AMV | Valve Output | BK | Black |
| E | Input (analog or digital) | a | Valve Control Output + | BN | Brown |
| T | Teach Input | b | Valve Control Output 0 V | RD | Red |
| Z | Time Delay (activation) | SY | Synchronization | OG | Orange |
| S | Shielding | E+ | Receiver-Line | YE | Yellow |
| RxD | Interface Receive Path | S+ | Emitter-Line | GN | Green |
| TxD | Interface Send Path | ⏚ | Grounding | BU | Blue |
| RDY | Ready | SnR | Switching Distance Reduction | VT | Violet |
| GND | Ground | Rx+/– | Ethernet Receive Path | GY | Grey |
| CL | Clock | Tx+/– | Ethernet Send Path | WH | White |
| E/A | Output/Input programmable | Bus | Interfaces-Bus A(+)/B(–) | PK | Pink |
| | IO-Link | La | Emitted Light disengageable | GNYE | Green Yellow |

## Complementary Products

| |
|---|
| Dust extraction tube STAUBTUBUS-03 |
| Protection Housing Set ZSN-NN-02 |
| Reflector, Reflex Foil |

## Ctrl.Panel

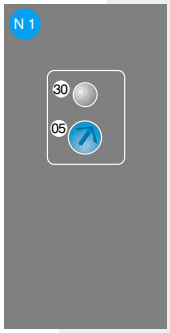


## Optic

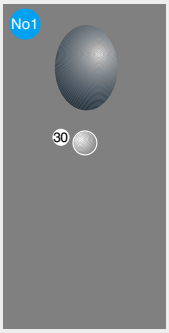


05 = Switching Distance Adjuster
30 = Switching Status/Contamination Warning

## Feasible reflector distance

Reflector type, mounting distance

| | | | |
|---|---|---|---|
| RQ100BA | 0...2,6 m | RR25_M | 0...1 m |
| RE18040BA | 0...1,4 m | RR25KP | 0...0,7 m |
| RQ84BA | 0...2,4 m | RR21_M | 0...0,75 m |
| RR84BA | 0...2,3 m | ZRAE02B01 | 0...1,2 m |
| RE9538BA | 0...0,9 m | ZRME01B01 | 0...0,4 m |
| RE6151BM | 0...2,3 m | ZRME03B01 | 0...1 m |
| RR50_A | 0...2,3 m | ZRMR02K01 | 0...0,5 m |
| RE6040BA | 0...2,5 m | ZRMS02_01 | 0...0,6 m |
| RE8222BA | 0...0,95 m | RF505 | 0...0,8 m |
| RR34_M | 0...1,3 m | RF508 | 0...0,8 m |
| RE3220BM | 0...0,9 m | RF258 | 0...0,6 m |
| RE6210BM | 0...0,75 m | ZRDF__K01 | 0...1,8 m |

Specifications are subject to change without notice