Inductive Proximity Switch

IW050BM55VA

Part Number

Technical Data

Inductive Data	
Switching Distance	5 mm
Correction Factors V2A/CuZn/Al	0,79/0,49/0,44
Mounting	flush
Mounting A/B/C/D in mm	0/36/15/0
Switching Hysteresis	< 15 %
Electrical Data	
Supply Voltage	10...30 V DC
Current Consumption (Ub = 24 V)	< 6 mA
Switching Frequency	400 Hz
Temperature Drift	< 10 %
Temperature Range	-25...80 °C
Switching Output Voltage Drop	< 2,5 V
Switching Output / Switching Current	200 mA
Residual Current Switching Output	< 100 µA
Short Circuit Protection	yes
Reverse Polarity and Overload Protection	yes
Protection Class	III
Mechanical Data	
Housing Material	CuZn, nickel-plated
Full Encapsulation	yes
Degree of Protection	IP67
Connection	Prewired
Cable Length	2 m
PNP NO/NC antivalent	●
Connection Diagram No.	201
Suiting Mounting Technology No.	150

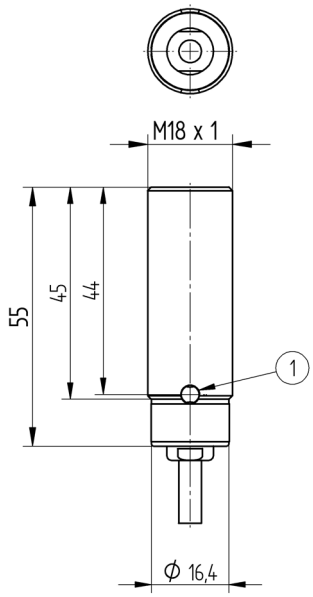

1 = Switching Status Indicator
All dimensions in mm (1 mm = 0.03937 Inch)

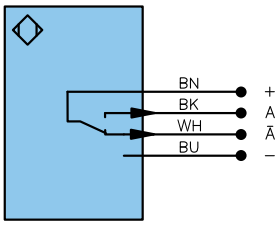

Legend

+	Supply Voltage +		U	Test Input		PoE	Power over Ethernet
–	Supply Voltage 0 V		Ū	Test Input inverted			
~	Supply Voltage (AC Voltage)		W	Trigger Input			
A	Switching Output	(NO)	O	Analog Output			
Ā	Switching Output	(NC)	O–	Ground for the Analog Output		Wire Colors according to DIN IEC 757	
V	Contamination/Error Output	(NO)	BZ	Block Discharge			
V̄	Contamination/Error Output	(NC)	AMV	Valve Output		BK	Black
E	Input (analog or digital)		a	Valve Control Output +		BN	Brown
T	Teach Input		b	Valve Control Output 0 V		RD	Red
Z	Time Delay (activation)		SY	Synchronization		OG	Orange
S	Shielding		E+	Receiver-Line		YE	Yellow
RxD	Interface Receive Path		S+	Emitter-Line		GN	Green
TxD	Interface Send Path		⏚	Grounding		BU	Blue
RDY	Ready		SnR	Switching Distance Reduction		VT	Violet
GND	Ground		Rx+/–	Ethernet Receive Path		GY	Grey
CL	Clock		Tx+/–	Ethernet Send Path		WH	White
E/A	Output/Input programmable		Bus	Interfaces-Bus A(+)/B(–)		PK	Pink
	IO-Link		La	Emitted Light disengageable		GNYE	Green Yellow

Mounting

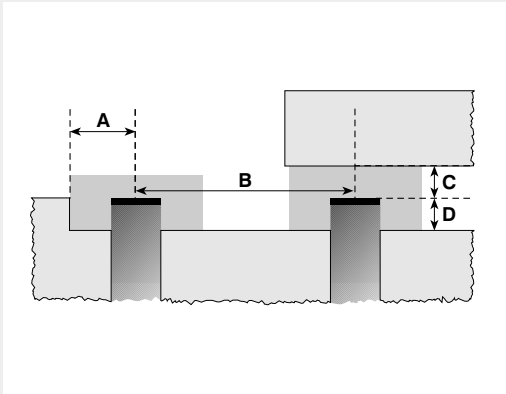

Specifications are subject to change without notice