Inductive Proximity Switch

IH030NK41VD

Part Number

Technical Data

Inductive Data	
Switching Distance	3 mm
Correction Factors V2A/CuZn/Al	0,82/0,54/0,48
Mounting	non-flush
Mounting A/B/C/D in mm	20/16//9/8
Flush mountable in Aluminum	yes
Switching Hysteresis	< 15 %
Electrical Data	
Supply Voltage	10...30 V DC
Current Consumption (Ub = 24 V)	< 6 mA
Switching Frequency	1 kHz
Temperature Drift	< 10 %
Temperature Range	-25...80 °C
Switching Output Voltage Drop	< 2,5 V
Switching Output / Switching Current	100 mA
Residual Current Switching Output	< 100 µA
Short Circuit Protection	yes
Reverse Polarity and Overload Protection	yes
Protection Class	III
Mechanical Data	
Housing Material	Plastic
Full Encapsulation	yes
Degree of Protection	IP67
Connection	Prewired
Cable Length	2 m
PNP NC	●
Connection Diagram No.	206

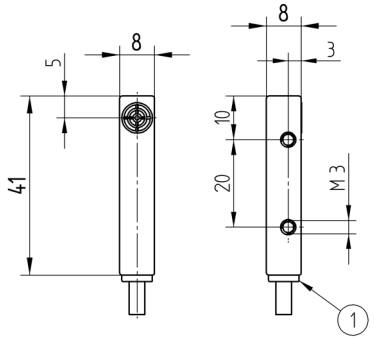

1 = Switching Status Indicator
All dimensions in mm (1 mm = 0.03937 Inch)

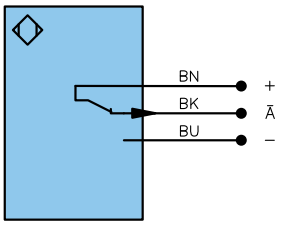

Legend

+	Supply Voltage +	
–	Supply Voltage 0 V	
~	Supply Voltage (AC Voltage)	
A	Switching Output	(NO)
Ā	Switching Output	(NC)
V	Contamination/Error Output	(NO)
V̄	Contamination/Error Output	(NC)
E	Input (analog or digital)	
T	Teach Input	
Z	Time Delay (activation)	
S	Shielding	
RxD	Interface Receive Path	
TxD	Interface Send Path	
RDY	Ready	
GND	Ground	
CL	Clock	
E/A	Output/Input programmable	
	IO-Link	

U	Test Input
Ū	Test Input inverted
W	Trigger Input
O	Analog Output
O–	Ground for the Analog Output
BZ	Block Discharge
AMV	Valve Output
a	Valve Control Output +
b	Valve Control Output 0 V
SY	Synchronization
E+	Receiver-Line
S+	Emitter-Line
⏚	Grounding
SnR	Switching Distance Reduction
Rx+/–	Ethernet Receive Path
Tx+/–	Ethernet Send Path
Bus	Interfaces-Bus A(+)/B(–)
La	Emitted Light disengageable

PoE	Power over Ethernet

Wire Colors according to DIN IEC 757

BK	Black
BN	Brown
RD	Red
OG	Orange
YE	Yellow
GN	Green
BU	Blue
VT	Violet
GY	Grey
WH	White
PK	Pink
GNYE	Green Yellow

Mounting

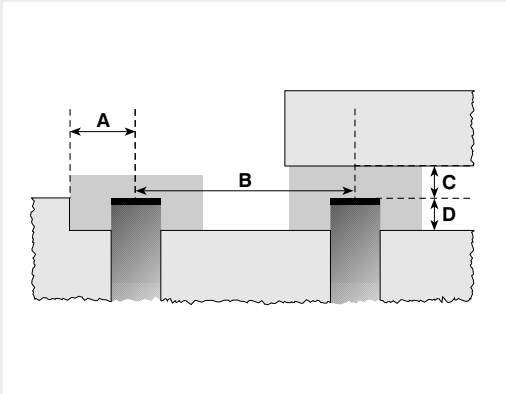

Specifications are subject to change without notice