Reflex Sensor
with Background Suppression

HT77PA3
Part Number

- **Adjustable Time Delay**
- **Infrared Light**
- **Plug can be rotated**
- **Triple Beam Correction Principle**

Technical Data

Optical Data	
Range	1500 mm
Adjustable Range	300...1500 mm
Switching Hysteresis	< 5 %
Light Source	Infrared Light
Service Life (T = +25 °C)	100000 h
Risk Group (EN 62471)	1
Max. Ambient Light	10000 Lux
Light Spot Diameter	see Table 1
Electrical Data	
Supply Voltage	10...30 V DC
Current Consumption (Ub = 24 V)	40 mA
Switching Frequency	300 Hz
Response Time	1700 µs
Off-Delay	0...1 s
Temperature Drift	< 5 %
Temperature Range	-25...60 °C
Switching Output Voltage Drop	< 2,5 V
PNP Switching Output/Switching Current	200 mA
Short Circuit Protection	yes
Reverse Polarity Protection	yes
Overload Protection	yes
Protection Class	III
Mechanical Data	
Housing Material	Plastic
Degree of Protection	IP67
Connection	M12 × 1; 4-pin
PNP NO/NC antivalent	●
Connection Diagram No.	101
Control Panel No.	TA1
Suiting Connection Technology No.	2
Suiting Mounting Technology No.	330

These sensors are particularly well suited for recognizing objects in front of any type of background. The color, shape and surface characteristics of the object have practically no influence on sensor switching performance.

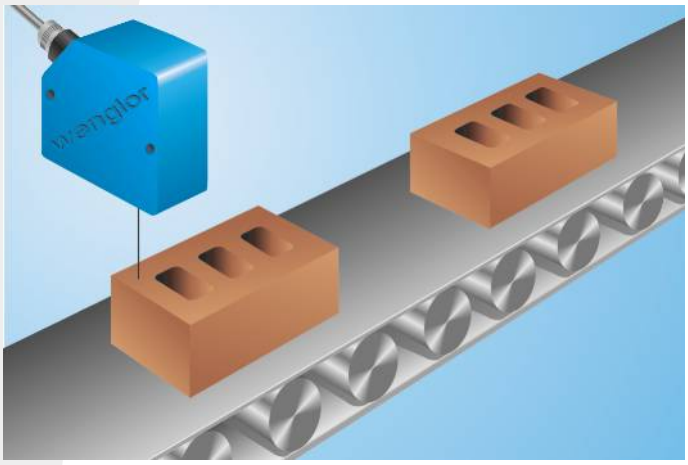

ME 61 RoHS

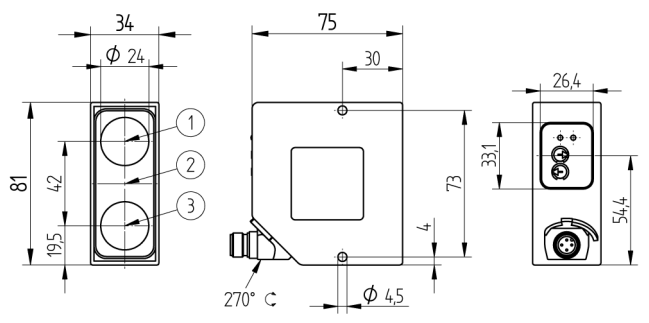

1 = Receiver Diode
2 = Transmitter Diode
3 = Receiver Diode
All dimensions in mm (1 mm = 0.03937 Inch)

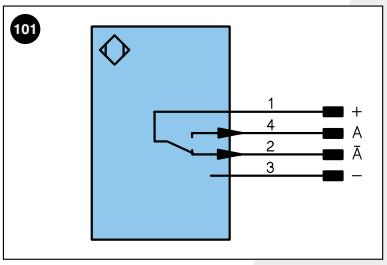

Legend

+	Supply Voltage +	U	Test Input	PoE	Power over Ethernet
–	Supply Voltage 0 V	Ū	Test Input inverted		
~	Supply Voltage (AC Voltage)	W	Trigger Input		
A	Switching Output (NO)	O	Analog Output		
Ā	Switching Output (NC)	O–	Ground for the Analog Output		
V	Contamination/Error Output (NO)	BZ	Block Discharge		
V̄	Contamination/Error Output (NC)	AMV	Valve Output		
E	Input (analog or digital)	a	Valve Control Output +		
T	Teach Input	b	Valve Control Output 0 V		
Z	Time Delay (activation)	SY	Synchronization		
S	Shielding	E+	Receiver-Line		
RxD	Interface Receive Path	S+	Emitter-Line		
TxD	Interface Send Path	⏚	Grounding		
RDY	Ready	SnR	Switching Distance Reduction		
GND	Ground	Rx+/–	Ethernet Receive Path		
CL	Clock	Tx+/–	Ethernet Send Path		
E/A	Output/Input programmable	Bus	Interfaces-Bus A(+)/B(–)		
	IO-Link	La	Emitted Light disengageable		

Wire Colors according to DIN IEC 757

BK	Black
BN	Brown
RD	Red
OG	Orange
YE	Yellow
GN	Green
BU	Blue
VT	Violet
GY	Grey
WH	White
PK	Pink
GNYE	Green Yellow

Table 1

Detection Range	300 mm	800 mm	1500 mm
Light Spot Diameter	6 mm	18 mm	30 mm

Ctrl.Panel

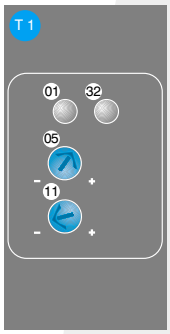

01 = Switching Status Indicator
05 = Switching Distance Adjuster
11 = ON-Delay/ OFF-Delay Adjuster
32 = Contamination Warning/ Error Warning

Switching Distance Deviation

Typical characteristic curve based on Kodak white, 90 %

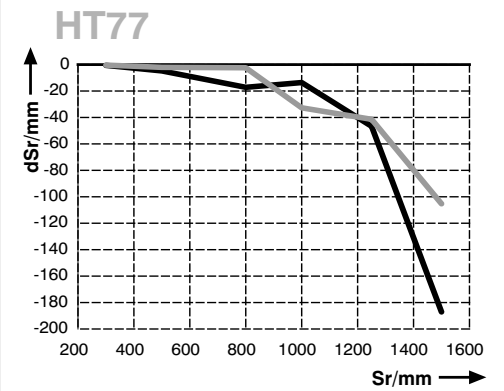

Sr = Switching Distance — black 6 %
dSr = Switching Distance Change — grey 18 %

Specifications are subject to change without notice