Reflex Sensor
with Background Suppression

HD12NCT3
Part Number

- **Electronic Background Suppression**
- **Red Light**
- **RS-232 Interface**
- **Stainless Steel Housing**
- **Teach-In, external Teach-In**

Technical Data

Optical Data	
Range	120 mm
Adjustable Range	35...120 mm
Switching Hysteresis	< 5 %
Light Source	Red Light
Service Life (T = +25 °C)	100000 h
Max. Ambient Light	10000 Lux
Light Spot Diameter	see Table 1
Electrical Data	
Supply Voltage	10...30 V DC
Current Consumption (Ub = 24 V)	< 30 mA
Switching Frequency	750 Hz
Response Time	667 µs
On-/Off-Delay (RS-232)	0...5 s
Temperature Drift	< 5 %
Temperature Range	-25...60 °C
Switching Output Voltage Drop	< 2,5 V
NPN Switching Output/Switching Current	100 mA
Short Circuit Protection	yes
Reverse Polarity Protection	yes
Overload Protection	yes
Teach Mode	HT,VT
Protection Class	III
Mechanical Data	
Adjustment	Teach-In
Housing Material	Stainless Steel
Full Encapsulation	yes
Degree of Protection	IP67
Connection	M12 × 1; 4-pin
NPN NO/NC switchable	●
RS-232 with Adapterbox	●
Connection Diagram No.	352
Control Panel No.	D 7
Suiting Connection Technology No.	2
Suiting Mounting Technology No.	150 160

These sensors are particularly well suited for recognizing objects in front of any type of background. The color, shape and surface characteristics of the object have practically no influence on sensor switching performance.

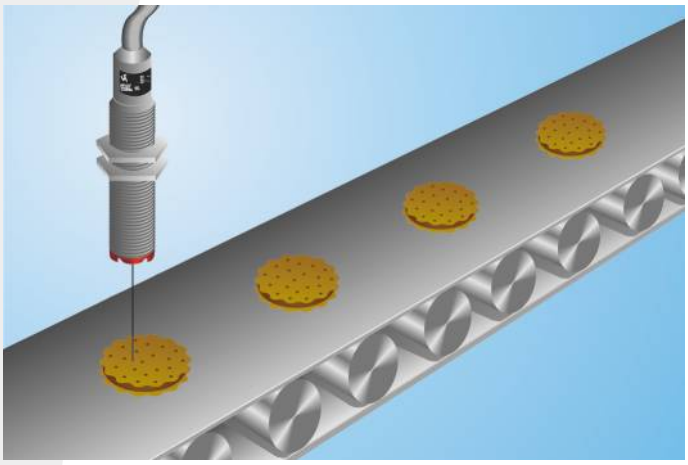

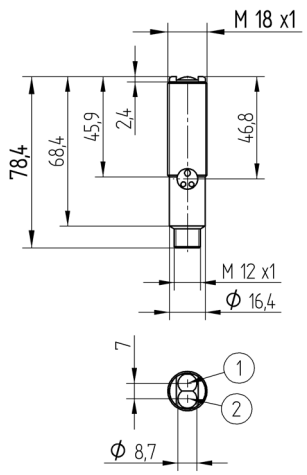

1 = Transmitter Diode
2 = Receiver Diode
All dimensions in mm (1 mm = 0.03937 Inch)

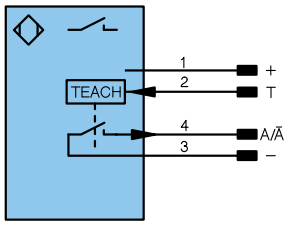

Legend

+	Supply Voltage +	U	Test Input	PoE	Power over Ethernet
–	Supply Voltage 0 V	Ū	Test Input inverted		
~	Supply Voltage (AC Voltage)	W	Trigger Input		
A	Switching Output (NO)	O	Analog Output		Wire Colors according to DIN IEC 757
Ā	Switching Output (NC)	O–	Ground for the Analog Output		
V	Contamination/Error Output (NO)	BZ	Block Discharge	BK	Black
V̄	Contamination/Error Output (NC)	AMV	Valve Output	BN	Brown
E	Input (analog or digital)	a	Valve Control Output +	RD	Red
T	Teach Input	b	Valve Control Output 0 V	OG	Orange
Z	Time Delay (activation)	SY	Synchronization	YE	Yellow
S	Shielding	E+	Receiver-Line	GN	Green
RxD	Interface Receive Path	S+	Emitter-Line	BU	Blue
TxD	Interface Send Path	⏚	Grounding	VT	Violet
RDY	Ready	SnR	Switching Distance Reduction	GY	Grey
GND	Ground	Rx+/–	Ethernet Receive Path	WH	White
CL	Clock	Tx+/–	Ethernet Send Path	PK	Pink
E/A	Output/Input programmable	Bus	Interfaces-Bus A(+)/B(–)	GNYE	Green Yellow
	IO-Link	La	Emitted Light disengageable		

Table 1

Detection Range	60 mm	120 mm
Light Spot Diameter	2 mm	4 mm

Complementary Products

Adapterbox A232
Dust extraction tube STAUBTUBUS-01

Ctrl.Panel

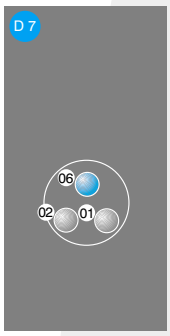

01 = Switching Status Indicator
02 = Contamination Warning
06 = Teach Button

Switching Distance Deviation

Typical characteristic curve based on Kodak white, 90 %

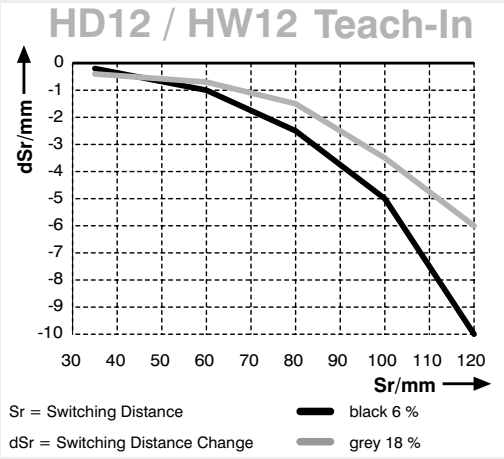

Specifications are subject to change without notice