Scanner

Sweep Raster Scanner

FIS-0870-1107 LASER

Part Number

- **Ethernet TCP/IP and EtherNet/IP**
- **Integrated Code Reconstruction**
- **LED Scanning Rate Indicator**
- **Maximum Oscillation Rate: 80 Oscillations/second**
- **Teach-In**

This Sweep Raster Scanner is suitable for scanning surface areas. The adjustable path-folding angle of the oscillating mirror allows for ideal adaptation to your application.
The following code types can be processed:
code 39, interleaved 2/5, code 128, Codabar, UPC, PDF417, code 93, AIAG, UCC/EAN-128, Micro PDF, Pharmacode, GS1 Databar.

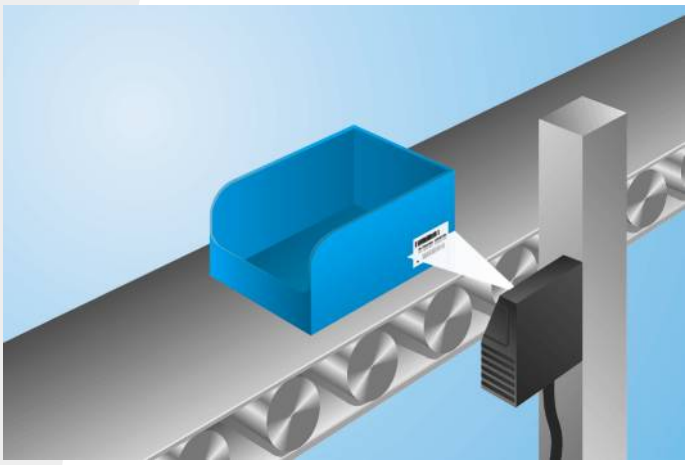

Technical Data

Optical Data	
High density	yes
Read Range	82...228 mm
Light Source	Laser (red)
Wave Length	655 nm
Service Life (T = +25 °C)	50000 h
Laser Class (EN 60825-1)	2
Max. Ambient Light	4840 Lux
Opening Angle	60 °
Adjustable Scan Width	yes
Barcode Label Contrast	> 25 %
Electrical Data	
Supply Voltage	10...28 V DC
Power Consumption	6480 mW
Scan Rate	300...1400 scans/sec
Temperature Range	0...50 °C
Switching Output	Optoisolator
Switching Outputs	3
Switching Output / Switching Current	100 mA
Reverse Polarity Protection	yes
Network Possibilities	Ethernet
Interface	RS-232/422/485
Baud Rate	< 100 MBd
Trigger Input	Optoisolator
Signal Input	Optoisolator
Number of Signal Inputs	3
Acoustic Indicator	yes
Protection Class	III
Mechanical Data	
Housing Material	Aluminum
Weight	453 g
Degree of Protection	IP65
Connection	M12 × 1; 12-pin
PNP NO/NC switchable	●
NPN NO/NC switchable	●
Connection Table No.	47
Control Panel No.	FI2
Suiting Connection Technology No.	12 13
Suiting Mounting Technology No.	440

ME 61 LASER CLASS 2 EN60825-1 RoHS

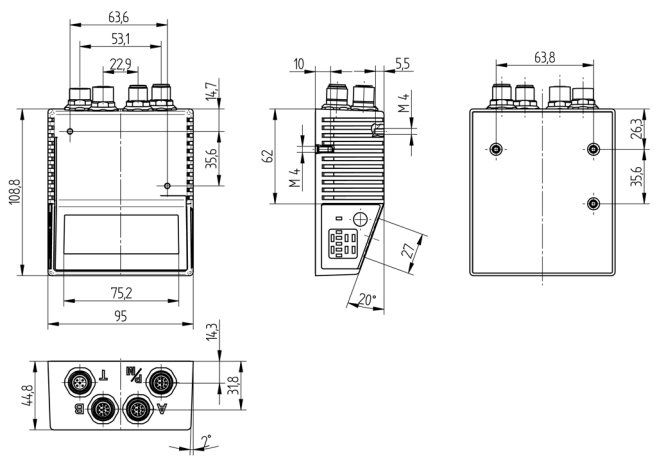

All dimensions in mm (1 mm = 0.03937 Inch)

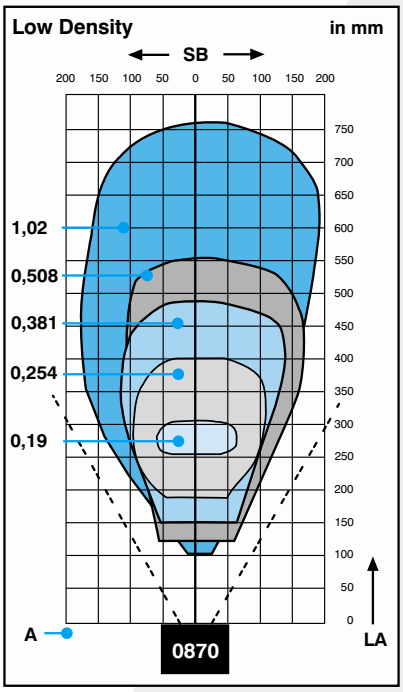

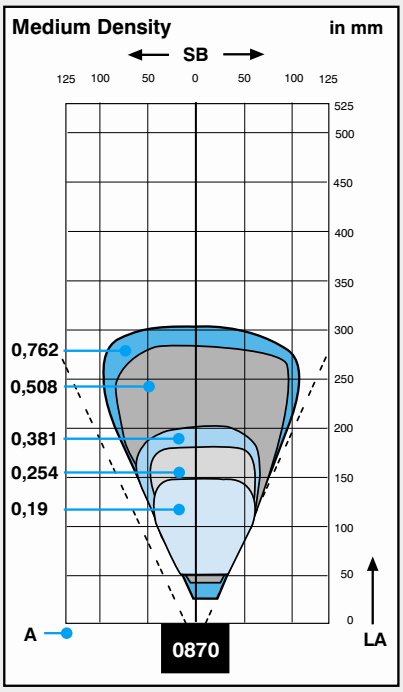

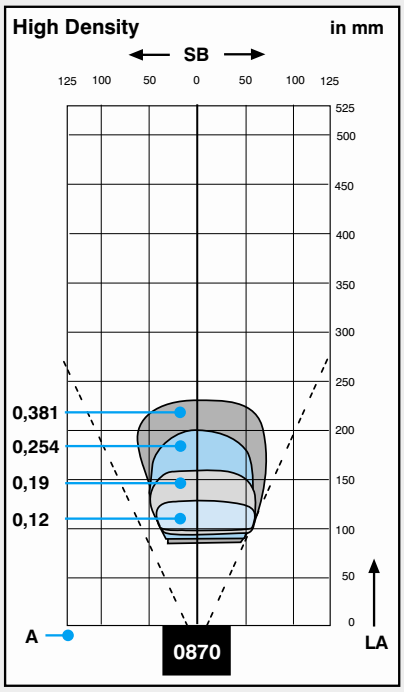

SB = Scan Width A = Resolution LA = Read Range

Ctrl.Panel

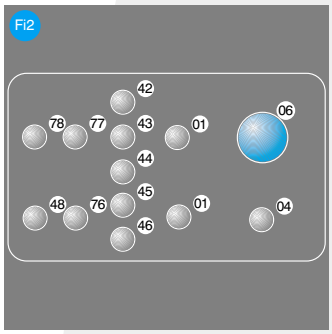

01 = Switching Status Indicator
04 = Function Indicator
06 = Teach Button
42 = Reading Performance 100 % / Good Read
43 = Reading Performance 80 % / Status / Trigger
44 = Reading Performance 60 %
45 = Reading Performance 40 %
46 = Reading Performance 20 %
48 = Network Status
76 = Network Tx enabled
77 = Network Rx enabled
78 = Module status

Complementary Products

Connection Box ZAA12NN01
Connection Cable ZAV88Rx01
Power Supply Unit NT10

Raster Configuration

Raster Sweep Angle	0°...10°	11°...20°	21°...34°
Sweeps/sec	80	60	40

Specifications are subject to change without notice