Scanner

Rasterscanner

FIS-0830-1100 LASER

Part Number

- **Adaptable 90° Mirror**
- **Adjustable Scanning Width**
- **Diagnosis Functions**
- **Ethernet TCP/IP and EtherNet/IP**
- **Integrated Code Reconstruction**

This barcode scanner is suitable for reading very high density barcodes. The adjustable scanning width allows for ideal adaptation to your application. The following code types can be processed: Code 39, Code 93, Interleaved 2/5, Code 128, Codabar, UPC, GS1 Databar, PDF417, Micro PDF417, UCC/EAN-128, AIAG, Pharmacode.

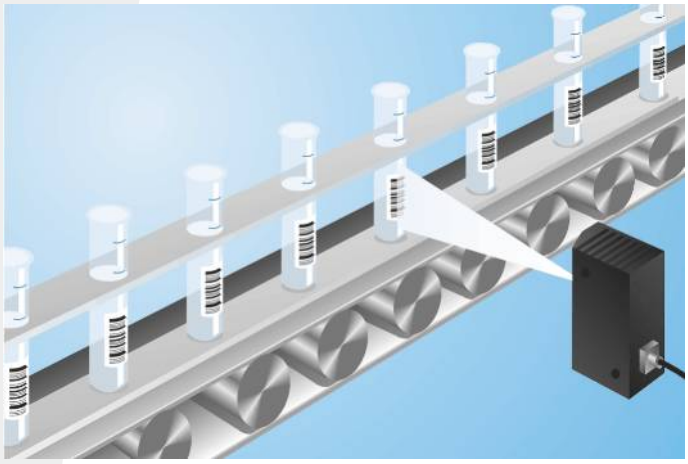

Technical Data

Optical Data	
Low density	yes
Fixed Raster Angle	2 °
Number of Raster Lines	10
Read Range	102...762 mm
Light Source	Laser (red)
Wave Length	655 nm
Service Life (T = +25 °C)	50000 h
Laser Class (EN 60825-1)	2
Max. Ambient Light	4840 Lux
Opening Angle	60 °
Adjustable Scan Width	yes
Barcode Label Contrast	> 25 %
Electrical Data	
Supply Voltage	10...28 V DC
Power Consumption	4320 mW
Scan Rate	300...1400 scans/sec
On-/Off-Delay (RS-232)	0...2,55 s
Temperature Range	0...50 °C
Switching Output	Optoisolator
Switching Outputs	3
Switching Output / Switching Current	100 mA
Reverse Polarity Protection	yes
Network Possibilities	Ethernet
Interface	RS-232
Baud Rate	< 100 MBd
Trigger Input	Optoisolator
Signal Input	Optoisolator
Number of Signal Inputs	2
Acoustic Indicator	yes
Protection Class	III
Mechanical Data	
Housing Material	Aluminum
Weight	212 g
Degree of Protection	IP65
Connection	M12 × 1; 12-pin
PNP NO/NC switchable	●
NPN NO/NC switchable	●
Connection Table No.	39
Control Panel No.	Fi2
Suiting Connection Technology No.	12 13
Suiting Mounting Technology No.	440

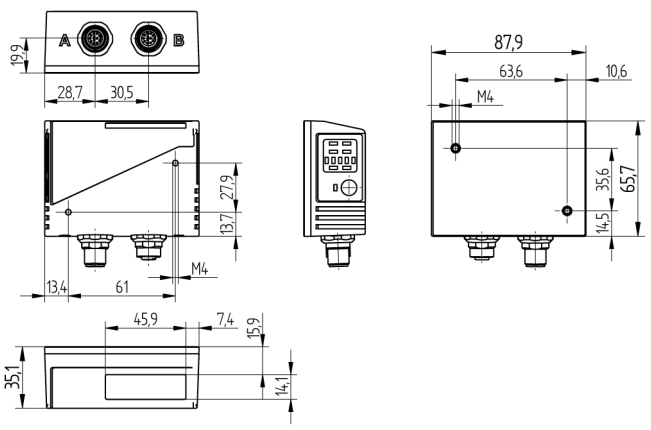

All dimensions in mm (1 mm = 0.03937 Inch)

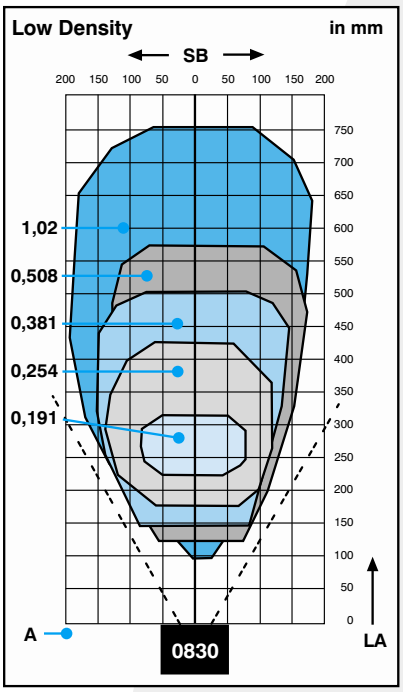

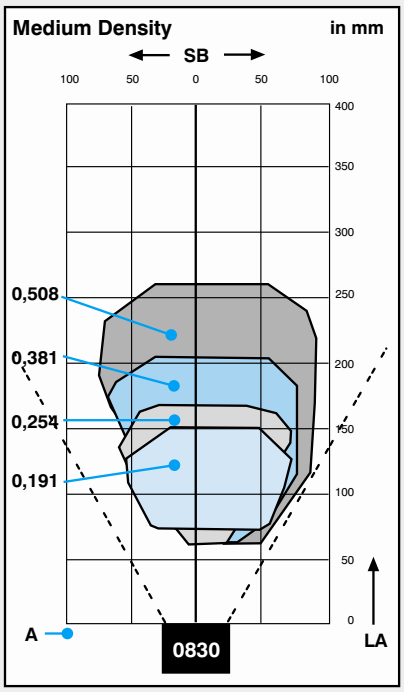

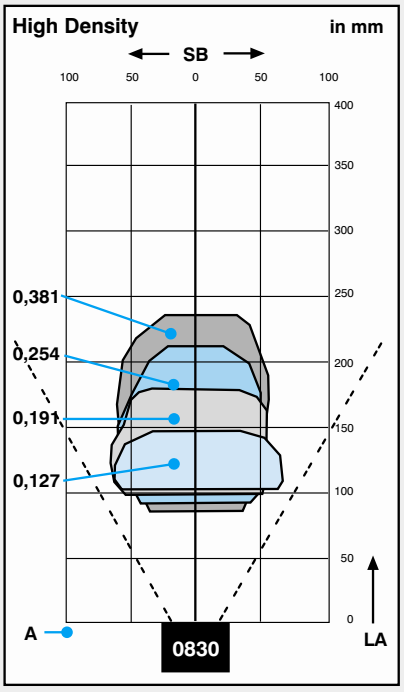

A = Resolution LA = Read Range SB = Scan Width

Ctrl.Panel

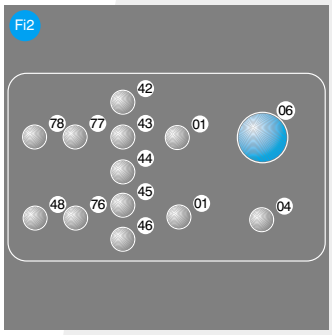

01 = Switching Status Indicator
04 = Function Indicator
06 = Teach Button
42 = Reading Performance 100 % / Good Read
43 = Reading Performance 80 % / Status / Trigger
44 = Reading Performance 60 %
45 = Reading Performance 40 %
46 = Reading Performance 20 %
48 = Network Status
76 = Network Tx enabled
77 = Network Rx enabled
78 = Module status

Complementary Products

Connection Box ZAA12NN01
Connection Cable ZAV88Rx01
Deflection Mirror LA19
Power Supply Unit NT10

Specifications are subject to change without notice