Analog Evaluation Unit
menu driven

AW02
Part Number

- **Easy operation via menu-driven LCD display**
- **High-speed evaluation of two analog voltages (GOOD/BAD selection)**
- **Measurement of thickness, difference, height, unbalance and volume flow**
- **Two independent outputs**

Technical Data

Electrical Data	
Supply Voltage	18...30 V DC
Current Consumption (Ub = 24 V)	100 mA
Measurement Rate	5000 /s
Temperature Range	-10...50 °C
Switching Outputs	2
PNP Switching Output/Switching Current	400 mA
PNP Error Output/Switching Current	400 mA
Analog Output	0...10 V
Short Circuit Protection	yes
Reverse Polarity Protection	yes
Interface	RS-232
Baud Rate	38,4 kBd
Resolution	< 5 mV
Analog Inputs	2
Analog Input	0...10 V
Protection Class	III
Mechanical Data	
Housing Material	Aluminum
Degree of Protection	IP65
Connection	M12 × 1; 8-pin
Error Output	●
PNP NO/NC switchable	●
Analog Output	●
RS-232 Interface	●
Connection Diagram No.	515
Control Panel No.	AW2
Suiting Connection Technology No.	88

The Evaluation Unit AW02 is able to process the analog voltage values of two sensors from 0 to 10 V. The user-friendly LCD-display indicates all measurement- and result values. The measurement units can be chosen freely, no matter if volt, millimeter, bar or degree Celsius.

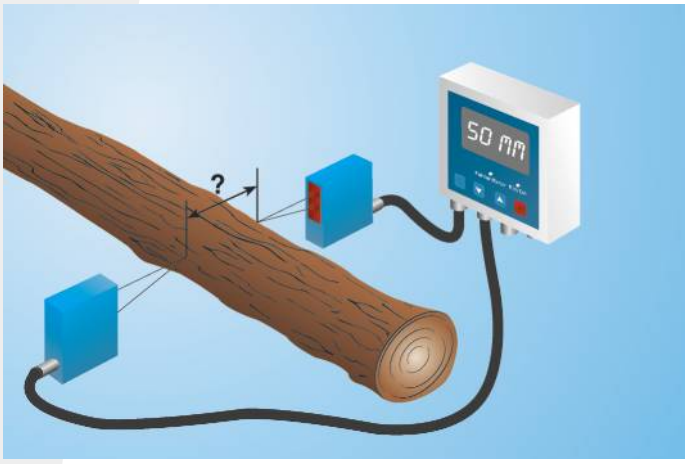

ME 61
RoHS

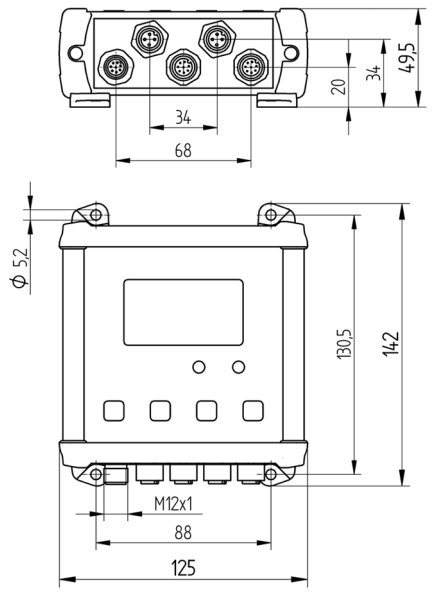

All dimensions in mm (1 mm = 0.03937 Inch)

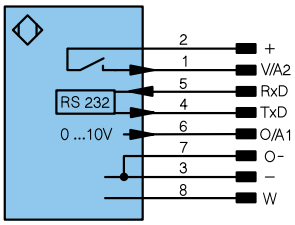

Legend

+	Supply Voltage +	U	Test Input	PoE	Power over Ethernet
–	Supply Voltage 0 V	Ū	Test Input inverted		
~	Supply Voltage (AC Voltage)	W	Trigger Input		
A	Switching Output (NO)	O	Analog Output		
Ā	Switching Output (NC)	O–	Ground for the Analog Output		Wire Colors according to DIN IEC 757
V	Contamination/Error Output (NO)	BZ	Block Discharge		
V̄	Contamination/Error Output (NC)	AMV	Valve Output	BK	Black
E	Input (analog or digital)	a	Valve Control Output +	BN	Brown
T	Teach Input	b	Valve Control Output 0 V	RD	Red
Z	Time Delay (activation)	SY	Synchronization	OG	Orange
S	Shielding	E+	Receiver-Line	YE	Yellow
RxD	Interface Receive Path	S+	Emitter-Line	GN	Green
TxD	Interface Send Path	⏚	Grounding	BU	Blue
RDY	Ready	SnR	Switching Distance Reduction	VT	Violet
GND	Ground	Rx+/–	Ethernet Receive Path	GY	Grey
CL	Clock	Tx+/–	Ethernet Send Path	WH	White
E/A	Output/Input programmable	Bus	Interfaces-Bus A(+)/B(–)	PK	Pink
	IO-Link	La	Emitted Light disengageable	GNYE	Green Yellow

Complementary Products

Interface Cable S232W3

Ctrl.Panel

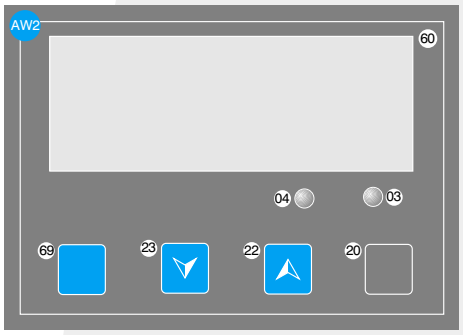

03 = Error Indicator
04 = Function Indicator
20 = Enter Button
22 = UP Button
23 = Down Button
60 = Display
69 = ESC Button

Specifications are subject to change without notice